重庆凯荣机械有限责任公司
CHONGQING KINGLONG MACHINERY CO.,LTD

重庆凯荣机械有限责任公司
CHONGQING KINGLONG MACHINERY CO., LTD

0086-23-68466272
WWW.KINGLONGLIFTING.COM
重庆市九龙坡区九龙工业园区华龙大道9号
No. 9, Hualong Ave., Jiulong Industrial Zone, Jiulongpo District, Chongqing, China 400052

关注我们

电子画册

品质第一 服务至上
QUALITY FIRST SERVICE FIRST

重庆凯荣机械有限责任公司
CHONGQING KINGLONG MACHINERY CO.,LTD

重庆凯荣
源于重庆，始于1965年，集研发、生产、销售于一体

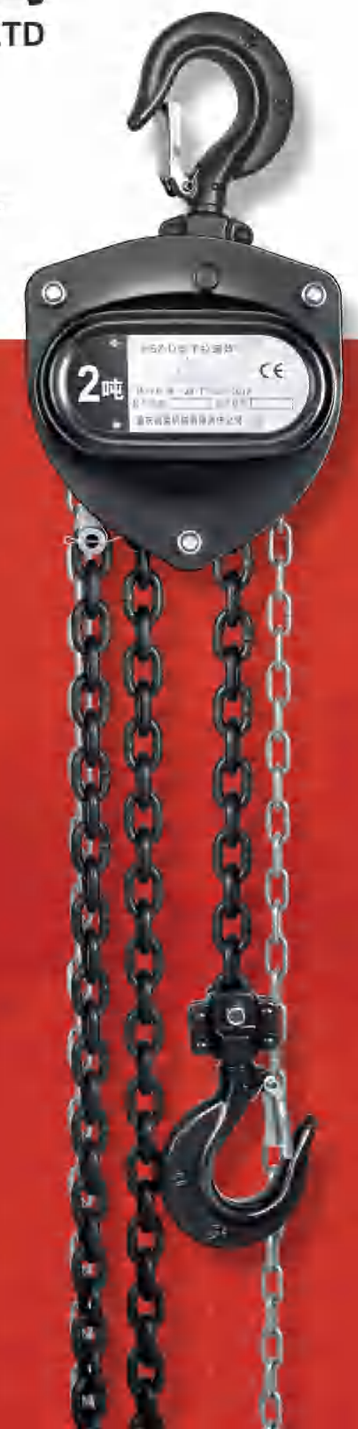

WWW.KINGLONGLIFTING.COM

*本公司产品质量由中国平安保险股份有限公司承保

目录 TABLE OF CONTENTS

企业简介 01
ABOUT ENTERPRISE

企业优势 03
COMPANY ADVANTAGES

企业荣誉 05
HONORS RECORD

企业团队 07
OUR TEAM

工厂展示 08
OUR FACTORY

展会活动 09
OUR EXHIBITIONS

项目展示 11
PROJECTS DISPLAY

电动葫芦(固定式) 14
ELECTRIC CHAIN HOIST FIXED TYPE

电动葫芦(运行式) 16
ELECTRIC CHAIN HOIST WITH ELECTRIC TROLLEY

超低净空运行式电动葫芦 18
ELECTRIC CHAIN HOIST WITH SUPER-LOW HEADROOM

双速电动葫芦 20
DUAL-SPEED ELECTRIC CHAIN HOIST

HSZ-K型手拉葫芦 21
CHAIN BLOCK HSZ-K SERIES

HSZ-D型手拉葫芦 24
CHAIN BLOCK HSZ-D SERIES

HSC型手拉葫芦 26
CHAIN BLOCK HSC SERIES

HSZ-CA型手拉葫芦 29
CHAIN BLOCK HSZ-CA SERIES

HSZ型手拉葫芦 33
CHAIN BLOCK HSZ SERIES

HSZ-CG型手拉葫芦 35
CHAIN BLOCK HSZ-CG SERIES

HSH A型系列手扳葫芦 36
HSH A SERIES LEVER CHAIN HOIST

HSH C型系列手扳葫芦 38
HSH C SERIES LEVER CHAIN HOIST

HSH X型系列手扳葫芦 39
HSH X SERIES LEVER CHAIN HOIST

迷你手扳葫芦0.25吨 HSH-0.25型&HSH-D0.25型 42
MINI LEVER HOIST 0.25 TON HSH-0.25 & HSH-D0.25

HSH-L型铝合金手扳葫芦 43
HSH-L ALUMINUM ALLOY LEVER HOIST

GCT/GCL系列手推/手链单轨小车 45
GCT / GCL SERIES TROLLEY

DHT型电动环链提升机和DHT-PJ型电动爬架提升机 49
DHT TYPE & DHT-PJ TYPE ELECTRIC CHAIN HOIST

微型电动葫芦系列 52
MINI ELECTRIC HOIST

扁平吊带 54
FLAT WEBBING SLING

捆绑带 55
CARGO LASHING/RATCHET TIE DOWN/RATCHET STRAPS

圆套 56
ROUND SLING

双眼柔性吊装带 57
ROUND SLINGS EYE & EYE

起重钳 58
LIFTING CLAMP

夹持器 59
BEAM CLAMP

牵引器/紧线器 59
HAND PULLER

钢丝绳牵引机 60
WIRE ROPE PULLING HOIST

油桶吊夹 60
DRUM CLAMPS

手摇绞盘 60
HAND WINCH

滑车 61
PULLEY BLOCK

高强度链条 63
HIGH STRENGTH CHAINS

ABOUT ENTERPRISE

企业简介

重庆凯荣机械有限责任公司前身系具有四十年左右的手动葫芦专业生产历史的重庆手动葫芦厂。重庆手动葫芦厂成立于1965年。

1965
手动葫芦厂成立

50+
行业经验积累

现公司位于重庆市九龙坡区九龙工业园区华龙大道9号，厂房占地面积达40余亩，生产性建筑面积达14000余平方米，距重庆西站仅3公里，距寸滩港28公里，水陆交通便捷。

本公司具有数十年积累的丰富的生产经验，有先进的生产设备，完善的测试手段，其中包括德国、意大利引进的7条电脑控制全自动链条生产线和其它的自动、半自动及数控机床。我公司主要生产环链电动葫芦、各型手拉葫芦、手扳葫芦、单轨小车以及各级高强度起重链条和小型吊挂具。现年产各型手动葫芦已达二十五万台，100万米各规格高强度起重链条的规模生产能力，是国内专业生产手动葫芦厂家。

我公司经国家工商行政管理总局批准登记注册“山城”“金山城”“双燕”“金山燕”牌各型手拉葫芦、手扳葫芦、单轨小车和高强度起重链条，性能可靠，品质优良，在全国各地及海外包括欧美在内的四十多个国家和地区拥有众多的用户，享有良好的声誉。

向各用户及贸易界人士提供一流的产品和周到的售后服务是我公司的一贯宗旨。

The predecessor Chongqing Chain Block factory with over 40 years history of manual chain hoist production is now known as Chongqing Kinglong Machinery Co., LTD, located in Chongqing (Chungking) municipality, the southwest central city of China. Our factory covers an area of 27,000 square meters, among which the production area has 14,000 square meters with 8 workshops, and is situated at the side of main road with a distance of 3km from Chongqing West Railway Station and 28km from Cuntan Port, so both land and water transportation are very convenient.

With abundant experience in producing manual hoists for more than 55 years, we have possessed perfect testing devices and advanced equipment, including seven computer-controlled chain bending and welding production lines which were imported from Germany and Italy for high-strength chains, and other automatic and semiautomatic digital-controlled machines, which greatly increase the production efficiency and product precision.

Our main items are various types of chain blocks, lever hoists, beam trolley, electric chain hoist and high strength chains as well as chain slings. As one of the top professional chain hoist manufacturers in China, our products have high market shares both in domestic and international market and have good responses from customers as well. Our annual output of chain blocks has reached 250,000 sets and high-strength chains 1,000,000 meters.

Besides, our brands "SHAN CHENG" & "SHUANG YAN" enjoy good reputation in domestic and worldwide due to our persistent business principles such as customer first, reliable quality, high cost-effective and satisfactory after-sales services, which we have been adhering to and will adhere to.

COMPANY ADVANTAGES

企业优势

40+ 亩
工厂占地

250000 台
年产量手动葫芦

14000 m²
生产建筑

100 万米
高强度起重链条

- Production area of 14000 square meters
- Output of 250,000 pcs manual hoists per year
- Output of 1000,000 meters high-strength chain per year
- Advanced manufacturing equipment
- Excellent research and design team
- Mature technology, perfect manufacturing processes and skillful workers& stable labors

生产优势
MANUFACTURING ADVANTAGES

工厂占地40余亩，生产建筑14000余平方米，年产量25万台手动葫芦，100万米高强度起重链条。拥有先进的生产设备，丰富的生产经验，醇熟的技术工人，是国内专业生产手动葫芦厂家。

- Production area of 14000 square meters
- Output of 250,000 pcs manual hoists per year
- Output of 1000,000 meters high-strength chain per year
- Advanced manufacturing equipment
- Excellent research and design team
- Mature technology, perfect manufacturing processes and skillful workers& stable labors

质量优势
QUALITY MERITS

拥有先进的进口链条设备，完善的检测设备和质量控制体系，配备专业的质量检测人员，为客户提供质量过硬的产品。公司有ISO，CE等认证，并符合工信部颁布的中华人民共和国机械行业最新标准**JB/T 7334-2016**。

- Factory operates under **ISO9001:2015** quality management system standard.
- Products comply with and beyond standards of CE and **JB/T 7334-2016**.
- Imported chain manufacturing machines from Germany and Italy
- Complete test machines with professional quality inspectors
- All products 100% tested for zero defect.

品牌优势
BRANDS ADVANTAGES

荣获40年以上"山城"商标，30年以上"SHUANGYAN"商标。

- Brands: Shancheng for over 40 years and Shuangyan for 30 years.

服务优势
SERVICE ADVANTAGES

建立全国销售网络和售后服务网络，客户至上，对客户的需求快速响应，对客户的反馈及时处理，让客户满意质量和服务。

- Customers priority, fast response to customers' needs.

山 城

山城品牌展示

品质第一、服务至上、创新发展、持续改进

"山城"品牌传承重庆的特色-山城，集聚了重庆人民的辛勤和智慧，发扬了重庆人民的踏实可靠精神，为重庆和全国的建设做出贡献，为重庆人增添光彩。

BRAND DISPLAY

QUALITY FIRST, SERVICE FOREMOST, CREATION, IMPROVEMENT

The Chinese brand Shancheng derived from the Mountain City - the characteristics of Chongqing Municipality. It symbolizes the spirit of the hard work and wisdom of Chongqing People and carries forward the traditionally practical and reliable merits of its people. By which, our enterprise has made contributions to the construction of Chongqing and the whole country and adds luster to Chongqing people.

HONORS RECORD

企业荣誉

荣誉证书

认证证书

检测报告

重庆凯荣机械有限责任公司
CHONGQING KINGLONG MACHINERY CO.,LTD.

20+ 奖项证书

第十一批出口基地企业之一
四川省500家最大市场占有工业企业
中国500家最大机械工业企业
重庆工业企业50强
四川省100家最佳经济效益企业
重庆市著名商标
中国机电产品出口商会会员
起重葫芦行业优秀企业单位

10+ 资质证书

通过ISO9001:2015质量管理体系认证
通过ISO9001:2000质量管理体系认证
通过CE、GS认证
通过ISO9001:2008质量管理体系认证
采用国际标准产品标志证书
欧洲CE机械安全指令符合
外观设计专利及包装盒外观设计专利
安全生产标准化三级企业（机械）
中国船级社A级证书

- In 1993, the company was approved as one of the first batch of export base enterprises by the State Council, the national Electromechanical Product Import & Export Office;
- In Jun 1993, won the title of "the 500 largest Market Share of Industrial Enterprises of Sichuan Province";
- In Sept. 1993, won the "Chinese 500 largest machinery industrial enterprises";
- In 1993 & 1994, was named "top 50 industrial enterprises in Chongqing city";
- In Jun 1995, was identified as one of the 100 enterprises with the best economic benefits in Sichuan.
- In 1999, CE certificates of conformity were issued for chain hoists by German Rhine Technical Supervision Consultants Limited.
- In 1999, 2002 & 2005, the trademarks "SHUANG YAN" and "SY" were awarded the famous brands of Chongqing city.
- From 2008 to 2014, "SHAN CHENG" and "SHUANG YAN" won the Chongqing famous brands.
- From 2009 to 2019, "SHAN CHENG" chain blocks were honored with "Chongqing branded products".
- In 2002, the factory passed the quality management system standard ISO9001:2000; and in 2010, passed ISO9001:2008;
- The company was elected as the vice president unit of the fifth and sixth councils by the Manual Hoist Branch of Chinese Heavy Machinery Industry Association;
- In 2004, was approved as an export member of the China Chamber for Import & Export of Machinery and Electric products.
- In 2007 & 2008, the company was identified as a trustworthy enterprise.
- In 2008, the factory passed GS certificates.
- In 2010, the company was awarded the titles of "consumer satisfaction unit" and "Chongqing after-sales service excellent unit";
- In 2005, 2010, 2014&2021, obtained the design patent certificates for chain block, lever hoist as well as for packing box respectively.
- In 2022, was awarded the certificate of the Integration of Informatization and Industrialization Management System after inspected and assessed by China Classification Society Certification Co., LTD.
- In 2022, the company was elected as the member of council and awarded as the 2017-2021 Excellent Chain Hoist Enterprise in hoist industry by China heavy machinery industry association.

OUR TEAM

企业团队

重庆凯荣机械有限责任公司两化融合升级贯标启动会

Our company applied for and obtained the Integration of Informatization and Industrialization Management Systems Certificate.

我公司对全体工作人员进行消防培训，让员工有安全意识，积极的预防和避免安全隐患。

Our company carries out fire safety training regularly to all the staffs.

政府相关部门来我厂视察

Relevant government department inspected our factory.

我企业团队荣获中国重型机械工业协会起重葫芦分会三届理事会优秀企业

Our enterprise was awarded one of the excellent enterprises in lifting hoist industry by China Heavy Machinery Industry Association.

OUR FACTORY

工厂展示

工厂外观
FACTORY APPEARANCE

链条车间
CHAIN WORKSHOP

手拉葫芦车间
CHAIN BLOCK WORKSHOP

手扳葫芦车间
LEVER HOIST WORKSHOP

OUR EXHIBITIONS

展会活动

中国上海国际五金博览会
CHINA INTERNATIONAL HARDWARE FAIR

国外展会-缅甸展会
MYANMAR FAIR

中国国际建筑模板、脚手架施工技术及产品设备展览会
CHINA BUILDING TEMPLATES, SCAFFOLDING CONSTRUCTION TECH. AND EQUIPMENT EXPO

中国西部国际五金博览会
WESTERN CHINA INTERNATIONAL FAIR

武汉国际绿色建筑装配博览会
WUHAN BUILDING MATERIALS EXPO

广州国际脚手架展览会
CANTON SCAFFOLDING FAIR

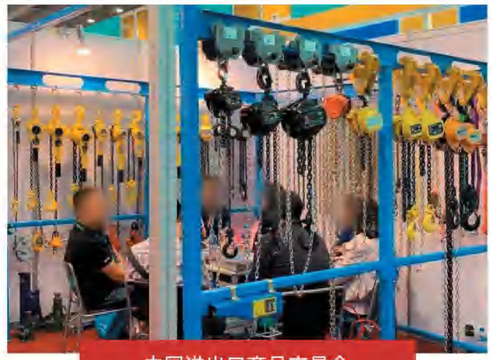

中国进出口商品交易会
CHINA IMPORT AND EXPORT FAIR

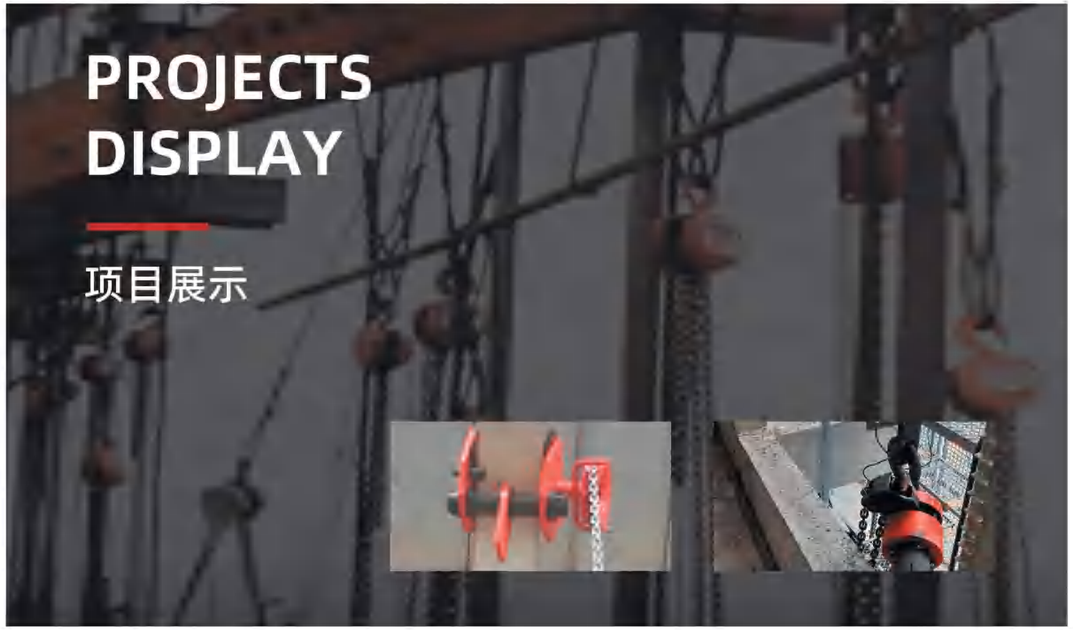

PROJECTS DISPLAY

项目展示

宜昌架桥项目
BRIDGE PROJECT

桥梁项目
BRIDGE PROJECT

渝湘高速桥梁项目
BRIDGE PROJECT

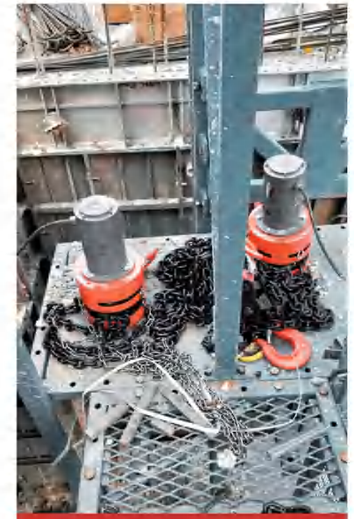

武汉绿地项目
REAL ESTATE PROJECT

长沙宝润项目
REAL ESTATE PROJECT

长沙时代领峰项目
REAL ESTATE PROJECT

宜昌造船厂项目
SHIPPLANT PROJECT

产品展示篇

PRODUCT DISPLAY

ELECTRIC CHAIN HOIST FIXED TYPE

Hook-Type Electric Chain Hoist has a lightweight structure design with low working noise. Capacities are optional from 0.5t to 50t. It is economic, durable and can be applied to various working environment.

电动葫芦(固定式)

挂钩式电动葫芦结构轻巧，工作噪音低。可选择从0.5t-50t的起重量，经济耐用可适用于各种工作环境。

KL02-02S

KL03-02S

KL10-04S

KL32-12S

KL0.5-01S

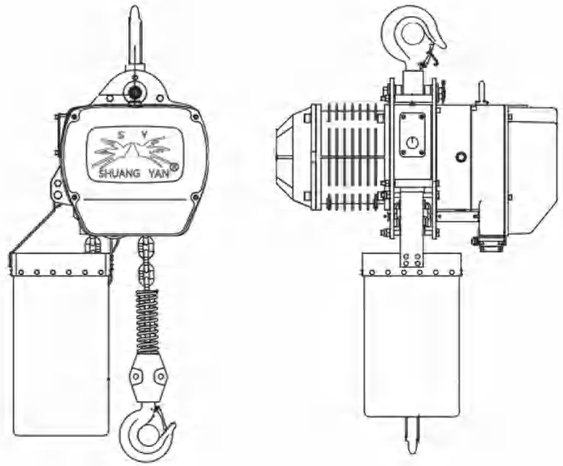

技术参数 Technical Parameters

Type 型号	Capacity 起重量 (Ton)	Lifting Height 提升高度 (m)	Single Lifting Speed 单速提升速度 (m/min)	Lifting Motor 提升电机					Chain Size 链条直径 (mm)	No. of Chain 链条数量
				Power 功率(kw)	Rotation Speed 转速 (r/min)	Phases 相数	Voltage 电压(V)	Frequency 频率(Hz/s)		
KL0.5-01S	0.5	3/9	7.2	1.1	1440	3	220-440	50/60	Φ 6.3	1
KL01-01S	1	3/9	6.8	1.5	1440	3	220-440	50/60	Φ 7.1	1
KL01-02S	1	3/9	3.6	1.1	1440	3	220-440	50/60	Φ 6.3	2
KL02-01S	2	3/9	6.6	3.0	1440	3	220-440	50/60	Φ 10.0	1
KL02-02S	2	3/9	3.4	1.5	1440	3	220-440	50/60	Φ 7.1	2
KL03-01S	3	3/9	5.6	3.0	1440	3	220-440	50/60	Φ 11.2	1
KL03-02S	3	3/9	3.3	3.0	1440	3	220-440	50/60	Φ 10.0	2
KL03-03S	3	3/9	2.2	1.5	1440	3	220-440	50/60	Φ 7.1	3
KL05-02S	5	3/9	2.8	3.0	1440	3	220-440	50/60	Φ 11.2	2
KL7.5-03S	7.5	3/9	1.8	3.0	1440	3	220-440	50/60	Φ 11.2	3
KL10-04S	10	3/9	2.8	3.0x2	1440	3	220-440	50/60	Φ 11.2	4
KL15-06S	15	3/9	1.8	3.0x2	1440	3	220-440	50/60	Φ 11.2	6
KL20-08S	20	3/9	1.4	3.0x2	1440	3	220-440	50/60	Φ 11.2	8
KL25-10S	25	3/9	1.1	3.0x2	1440	3	220-440	50/60	Φ 11.2	10
KL32-12S	32	3/9	0.9	3.0x2	1440	3	220-440	50/60	Φ 11.2	12
KL50-20S	50	3/9	0.9	3.0x2	1440	3	220-440	50/60	Φ 11.2	20

KL01-01S

KL05-02S

KL7.5-03S

KL10-04S

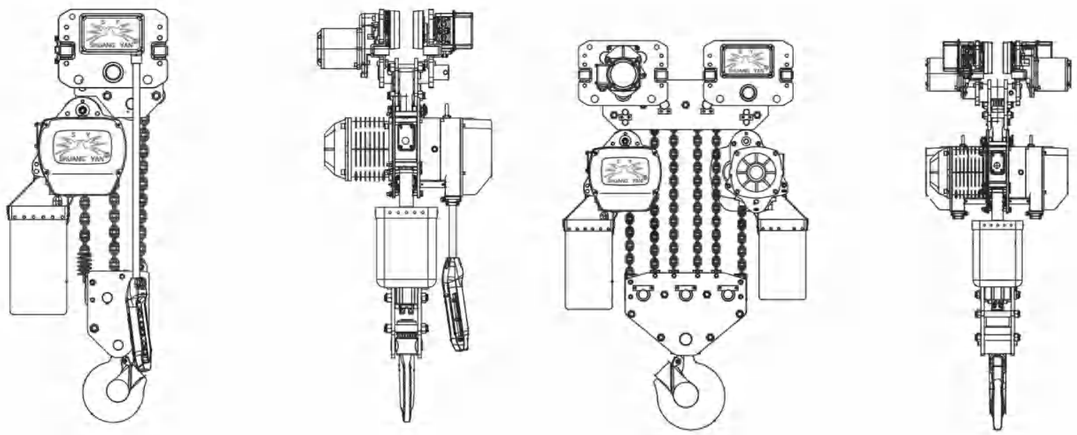

KL7.5-03S

KL10-04S

技术参数 Technical Parameters

Type 型号	Capacity 起重量 (Ton)	Lifting Height 提升高度 (m)	Lifting Speed 提升速度 (m/min)	Lifting Motor 提升电机					Operating Motor 运行电机						I-Beam Width 工字钢宽度 (mm)
				Power 功率 (kw)	Rotation Speed 转速 (r/min)	Phases 相数	Voltage 电压(V)	Frequency 频率 (Hz/s)	Power 功率 (kw)	Rotation Speed 转速 (r/min)	Traveling Speed 运行速度 (m/min)	Phases 相数	Voltage 电压(V)	Frequency 频率 (Hz)	
KL0.5-01S	0.5	3/9	7.2	1.1	1440	3	220-440	50/60	0.2	1440	10/20	3	220-440	50/60	70-130
KL01-01S	1	3/9	6.8	1.5	1440	3	220-440	50/60	0.4	1440	10/20	3	220-440	50/60	80-160
KL01-02S	1	3/9	3.6	1.1	1440	3	220-440	50/60	0.4	1440	10/20	3	220-440	50/60	80-160
KL02-01S	2	3/9	6.6	3.0	1440	3	220-440	50/60	0.4	1440	10/20	3	220-440	50/60	82-178
KL02-02S	2	3/9	3.4	1.5	1440	3	220-440	50/60	0.4	1440	10/20	3	220-440	50/60	82-178
KL03-01S	3	3/9	5.6	3.0	1440	3	220-440	50/60	0.75	1440	10/20	3	220-440	50/60	100-180
KL03-02S	3	3/9	3.3	3.0	1440	3	220-440	50/60	0.75	1440	10/20	3	220-440	50/60	100-180
KL03-03S	3	3/9	2.2	1.5	1440	3	220-440	50/60	0.75	1440	10/20	3	220-440	50/60	110-178
KL05-02S	5	3/9	2.8	3.0	1440	3	220-440	50/60	0.75	1440	10/20	3	220-440	50/60	100-178
KL7.5-03S	7.5	3/9	1.8	3.0	1440	3	220-440	50/60	0.75	1440	10/20	3	220-440	50/60	150-220
KL10-04S	10	3/9	2.8	3.0x2	1440	3	220-440	50/60	0.75x2	1440	10/20	3	220-440	50/60	150-220
KL15-06S	15	3/9	1.8	3.0x2	1440	3	220-440	50/60	0.75x2	1440	10/20	3	220-440	50/60	150-220
KL20-08S	20	3/9	1.4	3.0x2	1440	3	220-440	50/60	0.75x2	1440	10/20	3	220-440	50/60	150-220
KL25-10S	25	3/9	1.1	3.0x2	1440	3	220-440	50/60	0.75x2	1440	10/20	3	220-440	50/60	150-220
KL32-12S	32	3/9	0.9	3.0x2	1440	3	220-440	50/60	0.75x2	1440	10/20	3	220-440	50/60	150-220

备注：运行电机速度可选：10m/min, 20m/min
Remark: The traveling speed is optional at 10m/min or 20m/min.

KLL01-01S

KLL02-01S

KLL03-02S

KLL15-06S

KLL10-04S

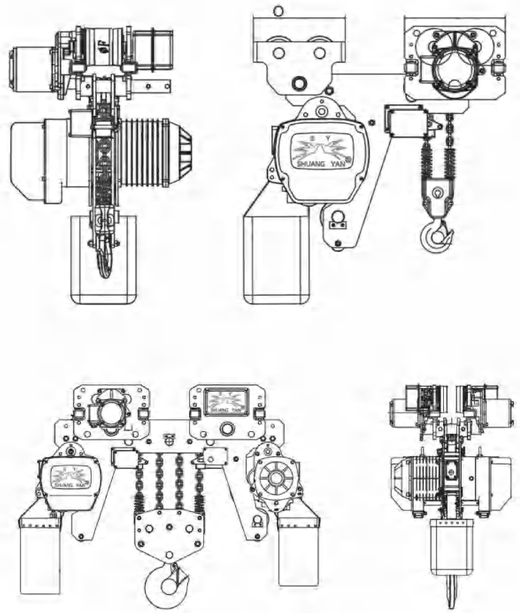

技术参数 Technical Parameters

Type 型号	Capacity 起重量 (Ton)	Lifting Height 提升高度 (m)	Lifting Speed 提升速度 (m/min)	Lifting Motor 提升电机					Operating Motor 运行电机						I-Beam Width 工字钢宽度 (mm)
				Power 功率 (kw)	Rotation Speed 转速 (r/min)	Phases 相数	Voltage 电压(V)	Frequency 频率 (Hz/s)	Power 功率 (kw)	Rotation Speed 转速 (r/min)	Operating Speed 运行速度 (m/min)	Phases 相数	Voltage 电压(V)	Frequency 频率 (Hz/s)	
KLL0.5-01S	0.5	3/9	7.2	1.1	1440	3	220-440	50/60	0.4	1440	10/20	3	220-440	50/60	100-160
KLL01-01S	1	3/9	6.8	1.5	1440	3	220-440	50/60	0.4	1440	10/20	3	220-440	50/60	100-160
KLL01-02S	1	3/9	3.6	1.1	1440	3	220-440	50/60	0.4	1440	10/20	3	220-440	50/60	100-160
KLL02-01S	2	3/9	6.6	3.0	1440	3	220-440	50/60	0.4	1440	10/20	3	220-440	50/60	120-160
KLL02-02S	2	3/9	3.4	1.5	1440	3	220-440	50/60	0.4	1440	10/20	3	220-440	50/60	120-160
KLL03-01S	3	3/9	5.6	3.0	1440	3	220-440	50/60	0.75	1440	10/20	3	220-440	50/60	120-160
KLL03-02S	3	3/9	3.3	3.0	1440	3	220-440	50/60	0.75	1440	10/20	3	220-440	50/60	120-160
KLL03-03S	3	3/9	2.2	1.5	1440	3	220-440	50/60	0.75	1440	10/20	3	220-440	50/60	120-160
KLL05-02S	5	3/9	2.8	3.0	1440	3	220-440	50/60	0.75	1440	10/20	3	220-440	50/60	120-160
KLL7.5-03S	7.5	3/9	1.8	3.0	1440	3	220-440	50/60	0.75	1440	10/20	3	220-440	50/60	120-160
KLL10-04S	10	3/9	2.8	3.0x2	1440	3	220-440	50/60	0.75x2	1440	10/20	3	220-440	50/60	150-220
KLL15-06S	15	3/9	1.8	3.0x2	1440	3	220-440	50/60	0.75x2	1440	10/20	3	220-440	50/60	150-220
KLL20-08S	20	3/9	1.4	3.0x2	1440	3	220-440	50/60	0.75x2	1440	10/20	3	220-440	50/60	150-220

备注：运行电机速度可选：10m/min, 20m/min
Remark: The traveling speed is optional at 10m/min or 20m/min.

技术参数 Technical Parameters

Type 型号	Capacity 起重量 (Ton)	Lifting Height 提升高度 (m)	Lifting Speed 提升速度 (m/min)	Lifting Motor 提升电机					Operating Motor 运行电机						Chain Size 链条直径 (mm)
				Power 功率 (kw)	Rotation Speed 转速 (r/min)	Phases 相数	Voltage 电压(V)	Frequency 频率 (Hz/s)	Power 功率 (kw)	Rotation Speed 转速 (r/min)	Traveling Speed 双速 (m/min)	Phases 相数	Voltage 电压(V)	Frequency 频率 (Hz/s)	
KL0.5-01D	0.5	3/9	7.2/2.4	1.1/0.37	2880/960	3	220-440	50/60	0.2	1440	10/3.3	3	220-440	50/60	Φ 6.3
KL01-01D	1	3/9	6.8/2.3	1.5/0.6	2880/960	3	220-440	50/60	0.4	1440	10/3.3	3	220-440	50/60	Φ 7.1
KL01-02D	1	3/9	3.6/1.2	1. 1/0.37	2880/960	3	220-440	50/60	0.4	1440	10/3.3	3	220-440	50/60	Φ 6.3
KL02-01D	2	3/9	6.6/2.2	3.0/1.0	2880/960	3	220-440	50/60	0.4	1440	10/3.3	3	220-440	50/60	Φ 10.0
KL02-02D	2	3/9	3.4/1.1	1.5/0.6	2880/960	3	220-440	50/60	0.4	1440	10/3.3	3	220-440	50/60	Φ 7.1
KL03-01D	3	3/9	5.6/1.9	3.0/1.0	2880/960	3	220-440	50/60	0.75	1440	10/3.3	3	220-440	50/60	Φ 11.2
KL03-02D	3	3/9	3.3/1.1	3.0/1.0	2880/960	3	220-440	50/60	0.75	1440	10/3.3	3	220-440	50/60	Φ 10.0
KL03-03D	3	3/9	2.3/0.8	1.5/0.6	2880/960	3	220-440	50/60	0.75	1440	10/3.3	3	220-440	50/60	Φ 7.1
KL05-02D	5	3/9	2.8/0.9	3.0/1.0	2880/960	3	220-440	50/60	0.75	1440	10/3.3	3	220-440	50/60	Φ 11.2
KL7.5-03D	7.5	3/9	1.8/0.6	3.0/1.0	2880/960	3	220-440	50/60	0.75	1440	10/3.3	3	220-440	50/60	Φ 11.2
KL10-04D	10	3/9	2.8/0.9	3.0/1.0x2	2880/960	3	220-440	50/60	0.75	1440	10/3.3	3	220-440	50/60	Φ 11.2
KL15-06D	15	3/9	1.8/0.6	3.0/1.0x2	2880/960	3	220-440	50/60	0.75x2	1440	10/3.3	3	220-440	50/60	Φ 11.2
KL20-08D	20	3/9	1.4/0.5	3.0/1.0x2	2880/960	3	220-440	50/60	0.75x2	1440	10/3.3	3	220-440	50/60	Φ 11.2
KL25-10D	25	3/9	1.1/0.4	3.0/1.0x2	2880/960	3	220-440	50/60	0.75x2	1440	10/3.3	3	220-440	50/60	Φ 11.2
KL32-12D	32	3/9	0.9/0.3	3.0/1.0x2	2880/960	3	220-440	50/60	0.75x2	1440	10/3.3	3	220-440	50/60	Φ 11.2

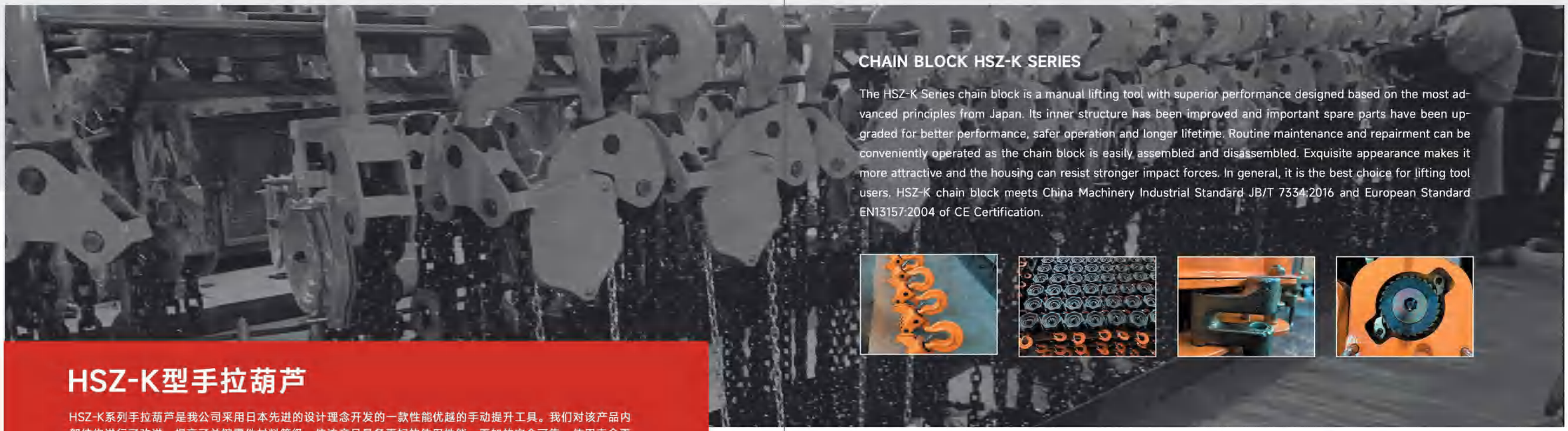

HSZ-K型手拉葫芦

HSZ-K系列手拉葫芦是我公司采用日本先进的设计理念开发的一款性能优越的手动提升工具。我们对该产品内部结构进行了改进，提高了关键零件材料等级，使该产品具备更好的使用性能，更加的安全可靠，使用寿命更长。零部件易拆装，给维修带来极大的方便；外形更加新颖美观，防撞能力强，是使用手动工具的最佳选择。产品符合国家机械行业标准JB/T7334:2016，并通过CE认证，符合欧洲标准EN13157:2004。

CHAIN BLOCK HSZ-K SERIES

The HSZ-K Series chain block is a manual lifting tool with superior performance designed based on the most advanced principles from Japan. Its inner structure has been improved and important spare parts have been upgraded for better performance, safer operation and longer lifetime. Routine maintenance and repairment can be conveniently operated as the chain block is easily assembled and disassembled. Exquisite appearance makes it more attractive and the housing can resist stronger impact forces. In general, it is the best choice for lifting tool users. HSZ-K chain block meets China Machinery Industrial Standard JB/T 7334:2016 and European Standard EN13157:2004 of CE Certification.

HSZ0.5-K

HSZ1-K

HSZ2-K-1

HSZ2-K-2

HSZ3-K

HSZ5-K

HSZ10-K

HSZ20-K

高强度尾环吊架
High-strength anchor plate

合金钢齿轮
Alloy steel gear

双导轮
Double guide rollers

双棘爪
Double ratchet pawls

一体式拉伸墙板
Integral bent plate

整体轴承
Sealed ball bearing

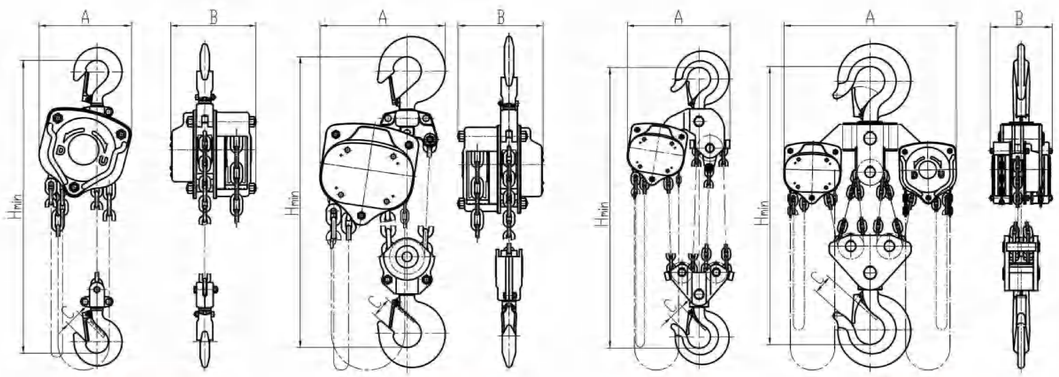

0.5T/1T/1.5T/2T　3T/5T　10T/15T　20T/30T

性能参数表 SPECIFICATION

型号规格 Model		HSZ0.5-K	HSZ1-K	HSZ1.5-K	HSZ2-K-1	HSZ2-K-2	HSZ3-K	HSZ5-K	HSZ10-K	HSZ15-K	HSZ20-K	HSZ30-K
额定起重量 Rated capacity	Ton	0.5	1	1.5	2	2	3	5	10	15	20	30
标准起升高度 Standard lift	m	2.5	2.5	2.5	2.5	2.5	3	3	3	3	3	3
试验载荷 Test load	kN	6.3	12.5	20	25	25	40	63	125	200	250	400
两钩间最小距离(Hmin) Min. distance between two hooks(Hmin)	mm	310	370	400	410	450	530	670	750	1000	1040	1100
额定载荷下手拉力 Hand pull to lift full load	N	260	323	356	390	340	370	410	436	445	450	460
起重链条直径 Load chain diameter	mm	5	6	7.1	8	6	7.1	9	10	10	10	10
起重链条行数 No. of load chain falls		1	1	1	1	2	2	2	4	6	8	12
主要尺寸 Main sizes(mm)	A	138	156	184	198	190	230	285	383	405	680	700
	B	128	144	153.5	162.5	144	153.5	184	184	230	229	330
	C	29	30	33	33	33	47	50	54	58	68	82
净重 Net weight	kg	7.5	10.2	15	16	13.8	22	36.6	70	117	154	235
毛重 Gross weight	kg	8	10.7	15.5	16.5	14.3	22.8	37.8	81	137	177	260
装箱尺寸(长x宽x高) Packing sizes (LxWxH)	cm	21x16x16	24x19x17	30x20x18	30x22x18	28x22x17	33x24x18	43x32x21	59x50x27	70x65x36	77x70x36	90x78x46
起升高度每增加1米增加重量 Extra weight per meter of extra lift	kg	1.4	1.6	1.87	2.16	2.34	2.95	4.35	9.4	13.5	18.6	27

注：除表列外，在12米以内各起升高度，均可订货。
Remark: The lifting height between 2.5m and 12m is available on request.

CHAIN BLOCK HSZ-D SERIES

HSZ-D series chain block is a portable manual lifting device easily operated by pulling hand chain, with following superior features.

- HSZ-D chain block meets China Machinery Industrial Standard JB/T 7334:2016 and European Standard EN13157:2004 of CE Certification.
- Heat-treated load chain grade 80 made of alloy steel materials.
- Drop forged hook with high strength.
- Transmission shaft adopts the structure of simply supported beam, which greatly improve the mechanical transmitting efficiency and enhance the stability.
- Double pawls support fail-safe brake mechanism.
- Double guide rollers make the load chain work smoothly without stuck.
- Thickened tough gear case can better resist impact force.
- Rolled-edge hand wheel cover prevents hand chain from stuck and reduces noise generated by pulling hand chain obliquely or horizontally.
- Electrostatic powder painting.

HSZ-D型手拉葫芦

HSZ-D系列手拉葫芦是一种使用简易、携带方便的手动起重机械。它不仅具有手链罩壳圆弧卷边、齿轮防护罩增厚、双导轮、双棘爪、哈夫式钩架、外观新颖等常规特点，还具有传动轴采用简支梁结构，机械传动效率高、稳定性强等优点。产品符合国家机械行业标准JB/T7334:2016，并通过CE认证，符合欧洲标准EN13157:2004。

HSZ-D1

HSZ-D2

HSZ-D3-2

HSZ-D5

高强度尾环吊架	合金钢齿轮	双导轮	双棘爪	一体式拉伸墙板	整体轴承	合金钢锻造吊钩	卷边罩壳
High-strength anchor plate	Alloy steel gear	Double guide rollers	Double ratchet pawls	Integral bent plate	Sealed ball bearing	Forged alloy steel hook	Rolled-edge hand wheel cover

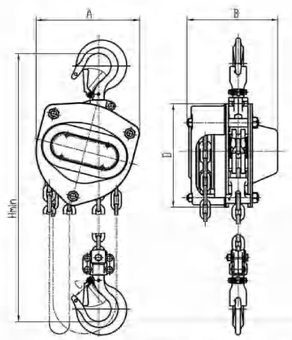

0.5T/1T/1.5T/2T

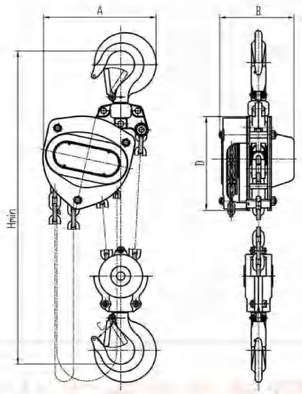

3T/5T

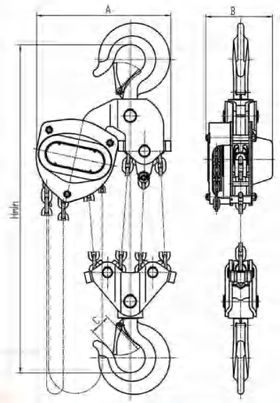

10T

性能参数表 SPECIFICATION

型号规格 Model		HSZ-D0.5	HSZ-D1	HSZ-D1.5	HSZ-D2	HSZ-D3-2	HSZ-D3-1	HSZ-D5	HSZ-D10	HSZ-D15	HSZ-D20
额定起重量 Rated capacity	Ton	0.5	1	1.5	2	3	3	5	10	15	20
标准起升高度 Standard lift	m	2.5	2.5	2.5	2.5	3	3	3	3	3	3
试验载荷 Test load	kN	6.3	12.5	20	25	40	40	63	125	200	250
两钩间最小距离(Hmin) The min. distance between two hooks(Hmin)	mm	330	360	430	460	540	565	670	775	1000	1040
额定载荷下手拉力 Hand pull to lift full load	N	240	250	265	335	340	363	365	380	400	415
起重链条直径 Load chain diameter	mm	5	6	7.1	8	7.1	10	9	9	10	10
起重链条行数 No. of load chain falls		1	1	1	1	2	1	2	4	6	8
主要尺寸 Main sizes(mm)	A	150	176.5	201	209	228	230	264	380	405	680
	B	129	152	173.5	176.5	173.5	176	188	188	228	222
	C	24	28	33	35	40	46	51	54	58	68
	D	150	174	201	213	201	235.34	236.5			
毛重 Gross weight	kg	8.4	11.5	15.8	18.2	24.4	29	37.5	62.6	117	154
装箱尺寸(长x宽x高) Packing sizes (LxWxH)	cm	28x17.5x16.5	30x20x18	36x23x20.5	37x24x21	36x26x20.5	34x26x20	48x34x21.5	59x50x27	70x65x36	77x70x36
起升高度每增加1米增加重量 Extra weight per meter of extra lift	kg	1.32	1.6	1.87	2.16	2.95	3	4.35	7.9	13.5	18.6

注：除表列外，在12米以内各起升高度，均可订货。
Remark: The lifting height between 2.5m and 12m is available on request.

CHAIN BLOCK HSC SERIES

HSC series chain block is a portable manual lifting device easily operated by pulling hand chain. Besides common features as HSZ series chain block in application and functions, it also has following superior features.

- HSC chain block meets China Machinery Industrial Standard JB/T 7334:2016 and European Standard EN13157:2004 of CE Certification.
- Thickened tough gear case can better resist impact force.
- Optional load chain cover can make chain links mesh well with chain sprocket.
- Rolled-edge hand wheel cover prevents hand chain from stuck and reduces noise generated by pulling hand chain obliquely or horizontally.
- Double pawls support fail-safe brake mechanism.
- Double guide rollers make the load chain work smoothly without stuck.
- High efficiency, easy pulling and light weight.
- Electrostatic powder painting.

HSC型手拉葫芦

HSC系列手拉葫芦是一种使用简易、携带方便的手动起重机械。产品符合国家机械行业标准JB/T7334:2016，并通过CE认证，符合欧洲标准EN13157:2004。除具有HSZ系列葫芦的使用范围及性能外，更具有以下特点：

1 齿轮防护罩增厚
大大提高冲击力

2 采用导链罩，有效保护
起重链条与起重链轮啮合

3 手链罩壳采用圆弧卷边、使手链条倾
斜或横拉时不产生卡链和过大噪声

4 机械效率高，手拉力小，自重较轻

5 双导轮、双棘爪

6 钩架采用哈夫式整体结构，
安全性能高

HSC-1

HSC-2-1

HSC-2-2

HSC-3

HSC-5

HSC-10

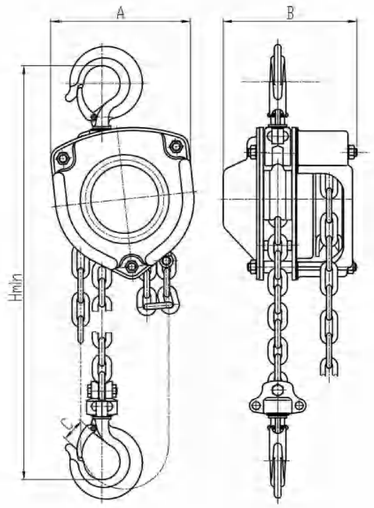

1T/1.5T/2T

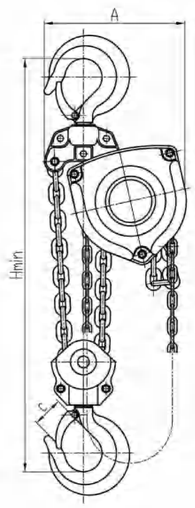

3T/5T

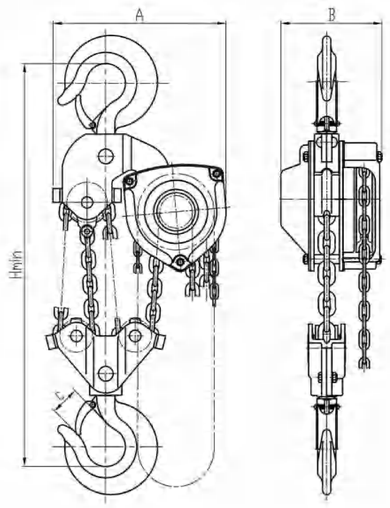

10T

性能参数表 SPECIFICATION

型号规格 Model		HSC-1	HSC-1.5	HSC-2-1	HSC-2-2	HSC-3	HSC-5	HSC-10
额定起重量 Rated capacity	Ton	1	1.5	2	2	3	5	10
标准起升高度 Standard lift	m	2.5	2.5	2.5	2.5	3	3	3
试验载荷 Test load	kN	12.5	2	25	25	40	63	125
两钩间最小距离(Hmin) Min. distance between two hooks(Hmin)	mm	330	413	430	475	570	685	775
额定载荷下手拉力 Hand pull to lift full load	N	323	356	390	340	370	420	440
起重链条直径 Load chain diameter	mm	6	7.1	8	6	7.1	9	9
起重链条行数 No. of load chain falls		1	1	1	2	2	2	4
主要尺寸 Main sizes(mm)	A	150	181	200	195	226	280	375
	B	140	150	157	140	150	180	180
	C	23	28	30	30	34	44	54
净重 Net weight	kg	9.9	13.5	16.2	13.5	22	36.6	65
毛重 Gross weight	kg	10.3	14	16.8	14	22.8	37.8	76
装箱尺寸(长x宽x高) Packing sizes (LxWxH)	cm	25x19x17	33x22x18	33x24x19	30x22x17	35x24x18	43x32x21	59x50x27
起升高度每增加1米增加重量 Extra weight per meter of extra lift	kg	1.6	1.87	2.16	2.4	2.95	4.35	8.15

注：除表列外，在12米以内各起升高度，均可订货。
Remark: The lifting height between 2.5m and 12m is available on request.

HSZ-CA型手拉葫芦

HSZ-CA系列手拉葫芦是我公司在HSZ型基础上改进推出的三角形手拉葫芦，除具备HSZ型手拉葫芦的优点外，外观更加新颖、漂亮，增加了抗碰撞能力，有效保护机体；提高关键部件材料等级，产品更加经久耐用，改进双链条手拉葫芦下钩架设计，防止链条翻转，使用更加安全。产品符合国家机械行业标准JB/T7334:2016，并通过CE认证，符合欧洲标准EN13157:2004。

HSZ-CA1

HSZ-CA2-1

HSZ-CA2-2

HSZ-CA3

CHAIN BLOCK HSZ-CA SERIES

HSZ-CA series chain block is a triangle type of portable manual lifting tool upgraded based on the performance of HSZ series chain block. Besides common features as HSZ series chain block in application and functions, it also has following superior features.

- HSZ-CA chain block meets China Machinery Industrial Standard JB/T 7334:2016 and European Standard EN13157:2004 of CE Certification.
- New designed exquisite housing shape enhances the impact resistance and effectively protects inner parts.
- The product has a longer lifetime as raw materials for important parts have been upgraded.
- Double pawls support fail-safe brake mechanism.
- Double guide rollers make the load chain work smoothly without stuck.
- Bottom hook holder has been improved to avoid the load chain from reversal.
- Electrostatic powder painting.

HSZ-CA5

HSZ-CA8

HSZ-CA10

HSZ-CA16

双导轮
Double guide rollers

双棘爪
Double ratchet pawls

合金钢吊钩
Forged alloy steel hook

HSZ-CA20

HSZ-CA30

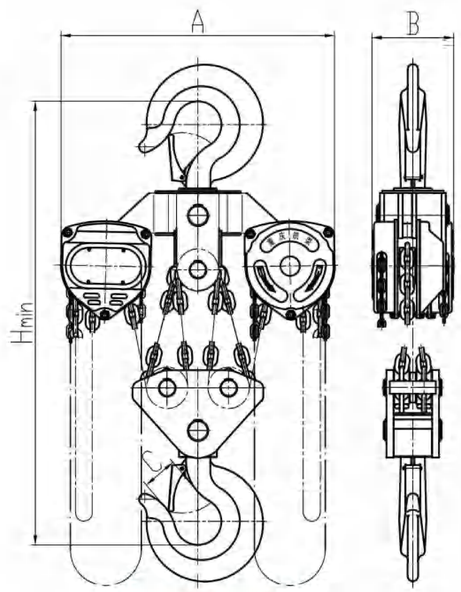

20T/30T

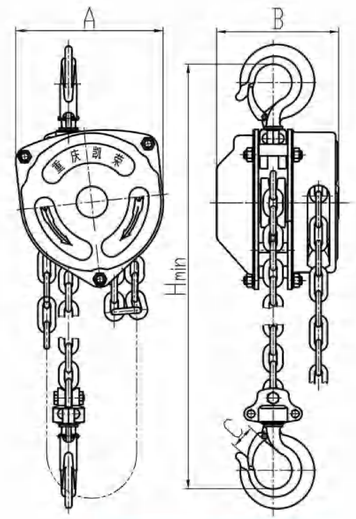

0.5T/1T/1.5T

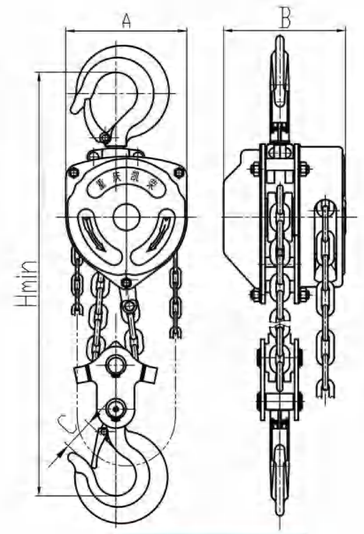

2T/3T/5T

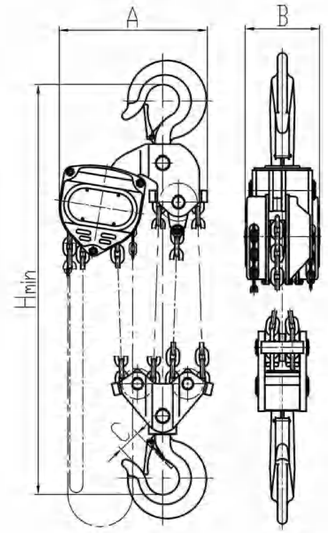

8T/10T/15T

性能参数表 SPECIFICATION

型号规格 Model		HSZ-CA0.5	HSZ-CA1	HSZ-CA1.5	HSZ-CA2-2	HSZ-CA2-1	HSZ-CA3	HSZ-CA5	HSZ-CA8	HSZ-CA10	HSZ-CA15	HSZ-CA20	HSZ-CA30
额定起重量 Rated capacity	Ton	0.5	1	1.5	2	2	3	5	8	10	15	20	30
标准起升高度 Standard lift	m	2.5	2.5	2.5	2.5	2.5	3	3	3	3	3	3	3
试验载荷 Test load	kN	6.3	12.5	20	25	25	40	63	100	125	200	250	400
两钩间最小距离(Hmin) The min. distance between two hooks(Hmin)	mm	280	300	380	392	410	515	640	650	730	1000	1040	1060
额定载荷下手拉力 Hand pull to lift full load	N	170	340	390	340	400	390	420	430	440	445	450	460
起重链条直径 Load chain diameter	mm	6	6	8	6	8	8	10	10	10	10	10	10
起重链条行数 No. of load chain falls		1	1	1	2	1	2	2	3	4	6	8	12
主要尺寸 Main sizes(mm)	A	150	150	190	150	190	190	216	345	375	405	630	660
	B	126	126	142	126	142	142	165	195	195	220	200	290
	C	19	22	25	27	27	34	44	49	54	58	68	82
净重 Net weight	kg	9	9.2	13.8	12.8	14.1	22.5	35	53	68	112	150	232
毛重 Gross weight	kg	9.5	9.7	15.3	13.3	14.7	23.3	36	64	79	135	173	257
装箱尺寸(长x宽x高) Packing sizes (LxWxH)	cm	25x18x16	25x18x16	27x23x18	27x20x16	27x23x18	32x23x18	41x30x27	59x50x27	59x50x27	70x65x36	77x70x36	90x78x46
起升高度每增加1米增加重量 Extra weight per meter of extra lift	kg	1.6	1.6	2.16	2.4	2.16	3.5	5	7.7	9.7	13.5	19.4	27

注：除表列外，在12米以内各起升高度，均可订货。
Remark: The lifting height between 2.5m and 12m is available on request.

HSZ型手拉葫芦

HSZ系列手拉葫芦是一种使用简易，携带方便的手动起重机械。产品制造要求符合中国机械行业目前手拉葫芦最新标准JB/T 7334:2016，并通过CE认证，符合欧洲标准EN13157:2004。
适用于工厂、矿山、建筑工地、农业生产以及码头、船坞、仓库等用于安装机器 、起吊货物和装卸车辆，尤其对于露天及无电源作业，更有其重要之功用。
HSZ系列手拉葫芦可与各型手拉单轨行车配套使用，组成手拉起重运输小车，适用于单轨架空运输、手拉单梁桥式起重机和悬臂式起重机上。

HSZ-0.5

HSZ-1

CHAIN BLOCK HSZ SERIES

HSZ series chain block is a round portable manual lifting tool and used in factories, mines, farms, construction sites, wharves, docks and warehouses for installation of equipment, as well as for loading and unloading goods. It is specially advantageous for lifting work in open air grounds and places where no electric power supply is available.

The chain block can be equipped with any type of manual trolley or electric trolley as a travelling chain block. It is fit for monorail overhead conveying system, hand travelling crane and jip crane.

HSZ chain block meets the latest China Machinery Industrial Standard JB/T 7334:2016 and European Standard EN13157:2004 of CE Certification.

性能参数表 SPECIFICATION

型号规格 Model		HSZ-0.5	HSZ-1	HSZ-1.5	HSZ-2	HSZ-3	HSZ-5	HSZ-7.5	HSZ-10	HSZ-15	HSZ-20	HSZ-30
额定起重量 Rated capacity	Ton	0.5	1	1.5	2	3	5	7.5	10	15	20	30
标准起升高度 Standard lift	m	2.5	2.5	2.5	2.5	3	3	3	3	3	3	3
试验载荷 Test load	kN	6.3	12.5	20	25	40	63	100	125	200	250	400
两钩间最小距离 The min. distance between two hooks	mm	233	300	360	380	470	600	650	730	1000	1040	1060
额定载荷下手拉力 Hand pull to lift full load	N	210	340	390	340	390	420	430	440	445	450	460
起重链条直径 Load chain diameter	mm	5	6	8	6	8	10	10	10	10	10	10
起重链条行数 No. of load chain falls		1	1	1	2	2	2	3	4	6	8	12
主要尺寸 Main sizes(mm)	A	120	142	178	142	178	210	336	358	405	580	650
	B	110	126	142	126	142	165	165	165	212	200	290
	C	19	22	25	27	34	44	49	54	58	68	82
	D	120	142	178	142	178	210					
净重 Net weight	kg	6	9.2	14.8	12.8	22.5	35	53	68	112	150	232
毛重 Gross weight	kg	6.4	9.7	15.4	13.3	23.3	36	64	79	135	173	257
装箱尺寸(长x宽x高) Packing sizes (LxWxH)	cm	22x16x14	25x18x16	27x23x18	27x20x16	32x23x18	41x30x21	59x50x27	59x50x27	70x65x36	77x70x36	90x78x46
起升高度每增加1米增加重量 Extra weight per meter of extra lift	kg	1.15	1.6	2.3	2.5	3.5	5	7.7	9.7	13.5	19.4	27

注：除表列外，在12米以内各起升高度，均可订货。
Remark: The lifting height between 2.5m and 12m is available on request.

CHAIN BLOCK HSZ-CG SERIES

HSZ-CG型手拉葫芦

HSZ-CG1

HSZ-CG2

HSZ-CG3

HSZ-CG5

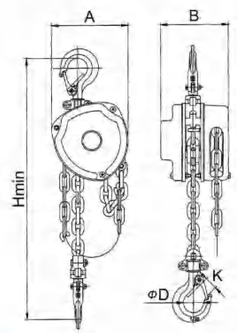

性能参数表 SPECIFICATION

型号规格 Model		HSZ-CG0.5	HSZ-CG1	HSZ-CG1.5	HSZ-CG2	HSZ-CG3	HSZ-CG5	HSZ-CG10	HSZ-CG20	HSZ-CG30
额定起重量 Rated capacity	Ton	0.5	1	1.5	2	3	5	10	20	30
标准起升高度 Standard lift	m	3	3	3	3	3	3	3	3	3
试验载荷 Test load	kN	6.3	12.5	20	25	40	63	125	250	400
额定载荷下手拉力 Hand pull to lift full load	N	200	320	360	340	385	435	435	435x2	435x2
起重链条直径 Load chain diameter	mm	6	6	8	6	8	10	10	10	10
起重链条行数 No. of load chain falls		1	1	1	2	2	2	4	8	12
主要尺寸 Main sizes(mm)	A	121.5	150	178	150	240	258	368	628	691
	B	117.5	133	154	133	154	173	207	173	312
	D	36	40	45	50	58	64	85	110	110
	K	27	31	33	39	40	43	64	81	81
	Hmin	285	295	350	375	510	600	780	890	1380
净重 Net weight	kg	8.5	11	18	14	27	42	83	193	220
起升高度每增加1米增加重量 Extra weight per meter of extra lift	kg	1.6	1.6	2.16	2.4	3.5	5	9.7	19.4	27

注：除表列外，在12米以内各起升高度，均可订货。
Remark: The lifting height between 2.5m and 12m is available on request.

HSH A SERIES LEVER CHAIN HOIST

The HSH A series lever hoist is our newly designed fourth generation product. It united all the advantages of former three generations and adopted Japanese latest style with "free gearing" system, easier operation, and more stylish triangle appearance. The lever hoist complies with the latest China Machinery Industrial Standard JB/T 7335:2016 and European Standard EN13157:2004.

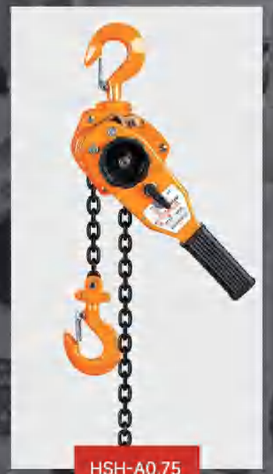
HSH-A0.75

HSH A型系列手扳葫芦

HSH A 系列手扳葫芦是我公司开发设计的手扳葫芦，其设计融入了HSH产品的优点，借鉴了日本先进的设计理念，结构上采用了新的齿轮离合装置，操作更加方便、灵活、外形呈三角型，愈显新颖美观。产品符合国家机械行业标准JB/T7335:2016，并通过CE认证，符合欧洲标准EN13157:2004。

HSH-A1.5

HSH-A2

HSH-A6

HSH-A9

HSH-A3

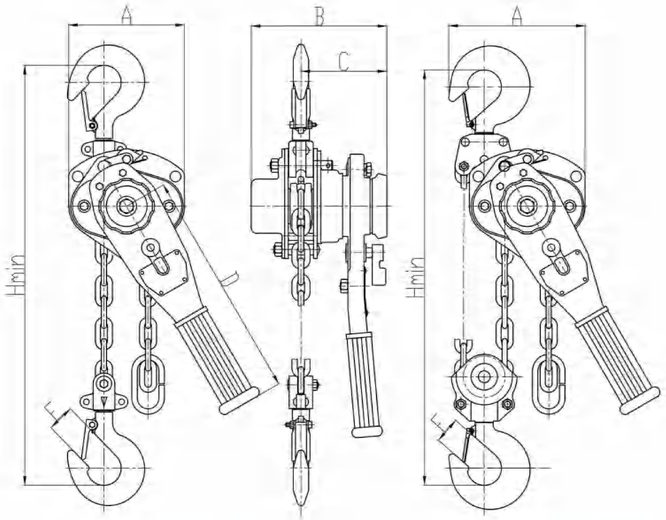

0.75T/1.5T/3T

6T

性能参数表 SPECIFICATION

型号规格 Model		HSH-A0.75	HSH-A1	HSH-A1.5	HSH-A2	HSH-A3	HSH-A6	HSH-A9
额定起重量 Rated capacity	t	0.75	1	1.5	2	3	6	9
标准起升高度 Standard lift	m	1.5	1.5	1.5	1.5	1.5	1.5	1.5
试验载荷 Test load	kN	10	12.5	20	25	40	80	112.5
两钩间最小距离(Hmin) The min. distance between two hooks(Hmin)	mm	320	320	350	370	440	575	660
额定载荷下手拉力 Hand pull to lift full load	N	220	230	260	300	380	390	390
起重链条直径 Load chain diameter	mm	6	6	7.1	8	10	10	10
起重链条行数 No. of load chain falls		1	1	1	1	1	2	3
主要尺寸 Main sizes(mm)	A	135	135	158	164	204	259	312
	B	150	150	163	177	193	193	195
	C	95	95	98	101	109.5	109.5	112
	D	256	256	368	368	368	368	365
	E	26	26	29	29	43	46	54
净重 Net weight	kg	7	7	10	12	18	28.5	40
起升高度每增加1米增加重量 Extra weight per meter of extra lift	kg	0.8	0.8	1.16	1.4	2.1	4.2	6.6

注：起升高度可按客户需求定做。
Remark: Customized lifting height is acceptable.

HSH-C0.75

HSH C SERIES LEVER CHAIN HOIST

The HSH C series lever hoist is much different from traditional HSH series lever hoist in inner gear design. Its lifting chain can be easily adjusted by hand under no-load condition, greatly increasing the work efficiency. The lever hoist is widely used for equipment installation and lifting goods in shipbuilding, power plants, transport, construction-sites and mines, etc. Its excellent performance is uniquely demonstrated when pulling and stretching work at any angle is operated in any workplace with narrow spaces, open air or aerial work. The lever hoist complies with the latest China Machinery Industrial Standard JB/T 7335:2016.

HSH C型系列手扳葫芦

HSH C型系列手扳葫芦的齿轮设计完全不同于传统的HSH系列。该产品在无载状态下可以自由调整起重链条，易于操作，从而大量缩短作业时间，是一种高效多用途的手动起重机械。广泛应用于造船、电力、运输、建筑、矿山等部门的设备安装、物品起吊等，尤其在狭小的工作场所、野外、高空作业和各种不同角度的牵拉更有其独特的优越性。
产品符合国家机械行业标准JB/T7335:2016。

性能参数表 SPECIFICATION

型号规格 Model		HSH-C0.75	HSH-C1.5
额定起重量 Rated capacity	Ton	0.75	1.5
标准起升高度 Standard lift	m	1.5	1.5
试验载荷 Test load	kN	10	20
两钩间最小距离(Hmin) The min. distance between two hooks(Hmin)	mm	325	380
额定载荷下手拉力 Hand pull to lift full load	N	220	230
起重链条直径 Load chain diameter	mm	6	8
起重链条行数 No. of load chain falls		1	1
主要尺寸 Main sizes(mm)	A	131	157
	B	154	177
	C	93	103
	D	290	410
	E	28	32
净重 Net weight	kg	7	11
起升高度每增加1米增加重量 Extra weight per meter of extra lift	kg	0.8	1.4

注：起升高度可按客户需求定做。
Remark: Customized lifting height is acceptable.

HSH-C1.5

0.75T/1.5T

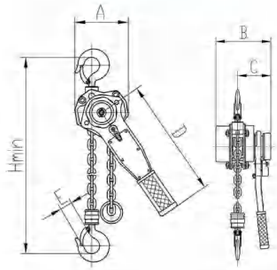

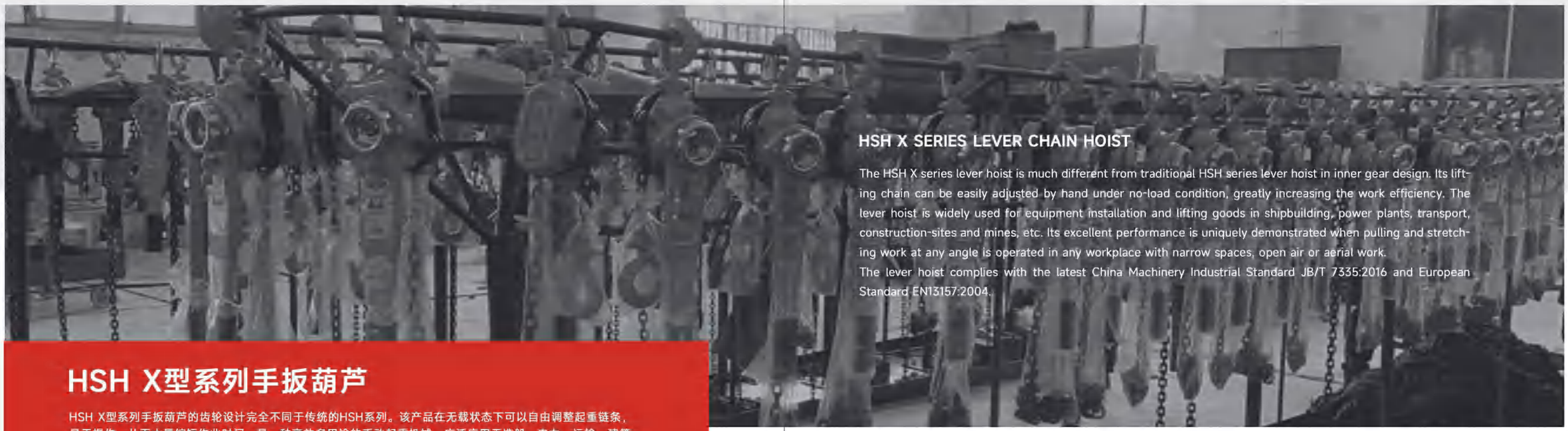

HSH X型系列手扳葫芦

HSH X型系列手扳葫芦的齿轮设计完全不同于传统的HSH系列。该产品在无载状态下可以自由调整起重链条，易于操作，从而大量缩短作业时间，是一种高效多用途的手动起重机械。广泛应用于造船、电力、运输、建筑、矿山等部门的设备安装、物体起吊等，尤其在狭小的工作场所、野外、高空作业和各种不同角度的牵拉更有其独特的优越性。产品符合国家机械行业标准JB/T7335:2016，并通过CE认证，符合欧洲标准EN13157:2004。

HSH X SERIES LEVER CHAIN HOIST

The HSH X series lever hoist is much different from traditional HSH series lever hoist in inner gear design. Its lifting chain can be easily adjusted by hand under no-load condition, greatly increasing the work efficiency. The lever hoist is widely used for equipment installation and lifting goods in shipbuilding, power plants, transport, construction-sites and mines, etc. Its excellent performance is uniquely demonstrated when pulling and stretching work at any angle is operated in any workplace with narrow spaces, open air or aerial work.
The lever hoist complies with the latest China Machinery Industrial Standard JB/T 7335:2016 and European Standard EN13157:2004.

HSH-X0.75

HSH-X1.5

HSH-X2

HSH-X3-1

HSH-X3-2

HSH-X6

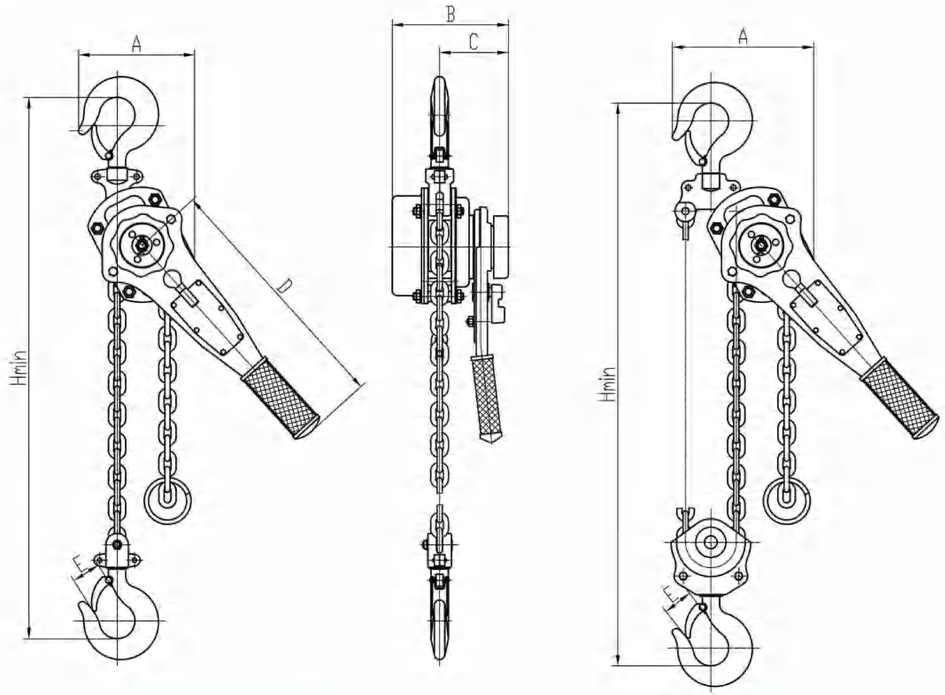

0.75T/1.5T/3T　　6T

性能参数表 SPECIFICATION

型号规格 Model		HSH-X0.75	HSH-X1.5	HSH-X3-1	HSH-X3-2	HSH-X6
额定起重量 Rated capacity	t	0.75	1.5	3	3	6
标准起升高度 Standard lift	m	1.5	1.5	1.5	1.5	1.5
试验载荷 Test load	KN	10	20	40	40	80
两钩间最小距离(Hmin) The min. distance between two hooks(Hmin)	mm	325	360	485	450	590
额定载荷下手拉力 Hand pull to lift full load	N	220	230	365	280	380
起重链条直径 Load chain diameter	mm	6	7.1	10	7.1	10
起重链条行数 No. of load chain falls		1	1	1	2	2
主要尺寸 Main sizes(mm)	A	135	154	190	210	245
	B	133	164	193	193	193
	C	80	100	107	107	107
	D	290	410	410	410	410
	E	25	29	34	34	44
净重 Net weight	kg	7	11	20	15	30
起升高度每增加1米增加重量 Extra weight per meter of extra lift	kg	0.8	1.4	2.1	2.8	4.2

注：起升高度可按客户需求定做。
Remark: Customized lifting height is acceptable.

性能参数表 SPECIFICATION

型号规格 Model		HSH-0.25	HSH-D0.25
额定起重量 Rated capacity	Ton	0.25	0.25
标准起升高度 Standard lift	m	1.5	1.5
试验载荷 Test load	kN	3.15	3.15
两钩间最小距离(Hmin) The min. distance between two hooks(Hmin)	mm	233	230
额定载荷下手拉力 Hand pull to lift full load	N	285	270
起重链条直径 Load chain diameter	mm	4	4
起重链条行数 No. of load chain falls		1	1
主要尺寸 Main sizes(mm)	A	71	67
	B	91	80
	C	70	62
	D	158	159.5
	E	24	26
净重 Net weight	kg	1.8	1.895
起升高度每增加1米增加重量 Extra weight per meter of extra lift	kg	0.31	0.31

注：起升高度可按客户需求定做。
Remark: Customized lifting height is acceptable.

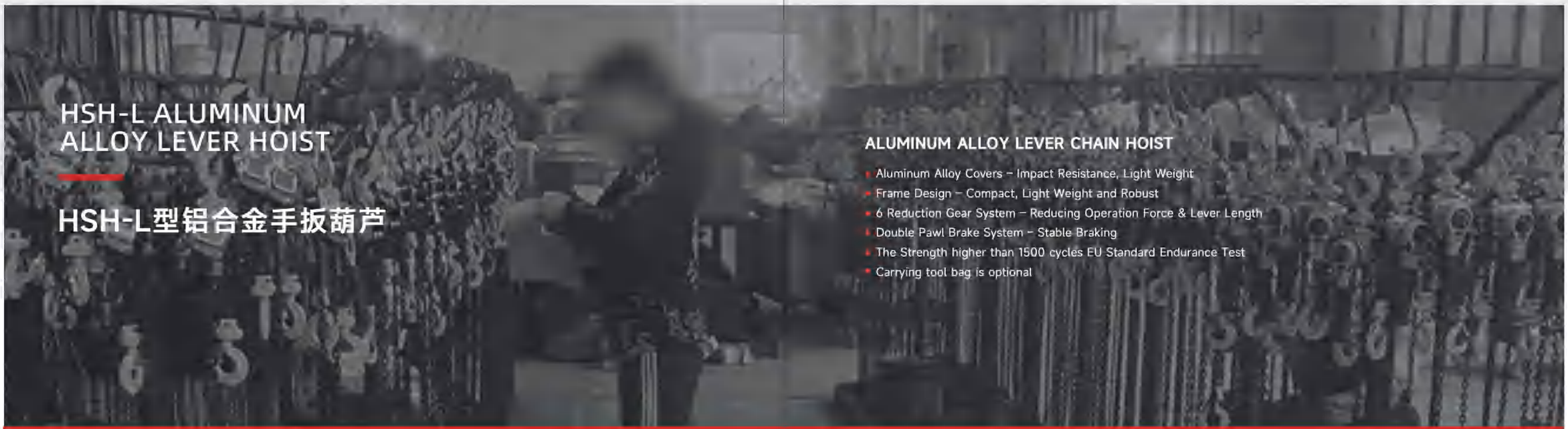

HSH-L ALUMINUM ALLOY LEVER HOIST

HSH-L型铝合金手扳葫芦

ALUMINUM ALLOY LEVER CHAIN HOIST

- Aluminum Alloy Covers – Impact Resistance, Light Weight
- Frame Design – Compact, Light Weight and Robust
- 6 Reduction Gear System – Reducing Operation Force & Lever Length
- Double Pawl Brake System – Stable Braking
- The Strength higher than 1500 cycles EU Standard Endurance Test
- Carrying tool bag is optional

HSH-L型铝合金手扳葫芦产品描述

1. 高强度铝合金壳体 - 自重轻
2. 紧凑框架设计 - 自重轻、强度高
3. 6齿轮减速系统 - 手扳力小、缩减扳手长度
4. 双棘爪刹车系统 - 平稳制动
5. 强度高 - 葫芦寿命超过1500次欧盟标准疲劳测试
6. 工具包可选

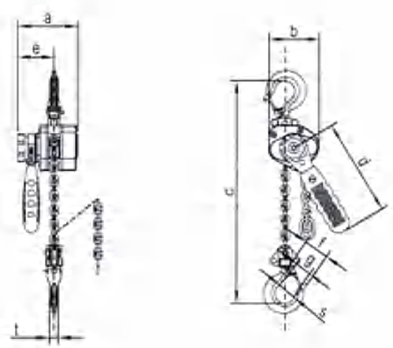

性能参数表 SPECIFICATION

型号规格 Model		HSH-L0.25	HSH-L0.5
额定起重量 Rated capacity	Ton	0.25	0.5
标准起升高度 Standard lift	m	1.5	1.5
试验载荷 Test load	kN	3.75	7.5
额定载荷下手拉力 Hand pull to lift full load	N	120	240
起重链条直径 Load chain diameter	mm	4	4
起重链条行数 No. of load chain falls		1	1
主要尺寸 Main sizes(mm)	a	100	100
	b	81	81
	c	230	250
	d	160	160
	e	62.5	62.5
	f	35	35
	g	26	24.5
	s	33	34.5
	t	11	15.5
净重 Net weight	kg	2.3	2.5
毛重 Gross Weight	kg	2.6	2.8
起升高度每增加1米增加重量 Extra weight per meter of extra lift	kg	0.31	0.31

注：起升高度可按客户需求定做。
Remark: Customized lifting height is acceptable.

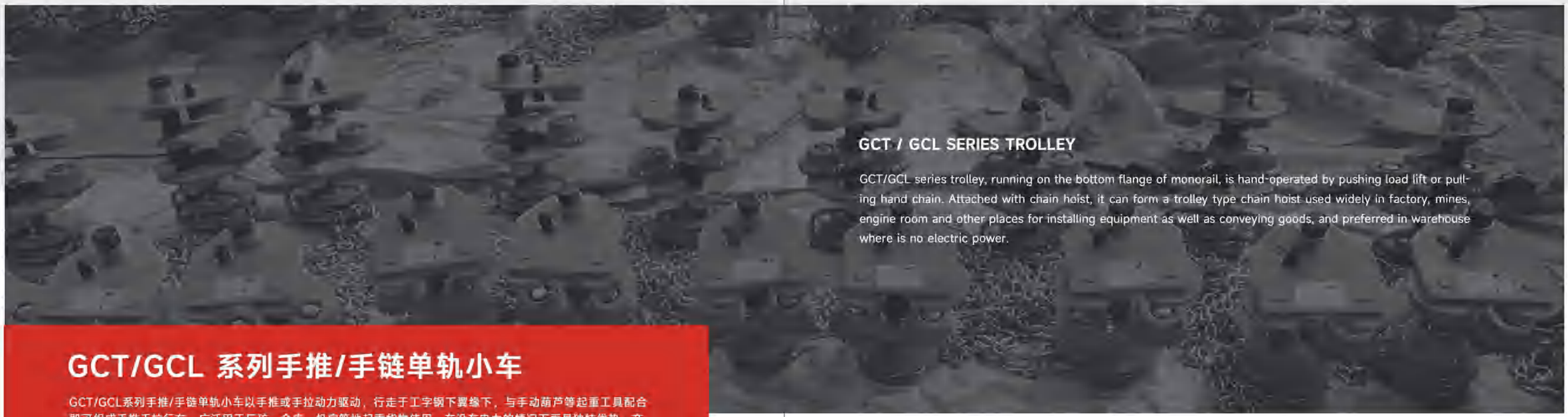

GCT / GCL SERIES TROLLEY

GCT/GCL series trolley, running on the bottom flange of monorail, is hand-operated by pushing load lift or pulling hand chain. Attached with chain hoist, it can form a trolley type chain hoist used widely in factory, mines, engine room and other places for installing equipment as well as conveying goods, and preferred in warehouse where is no electric power.

GCT/GCL 系列手推/手链单轨小车

GCT/GCL系列手推/手链单轨小车以手推或手拉动力驱动，行走于工字钢下翼缘下，与手动葫芦等起重工具配合即可组成手推手拉行车，广泛用于厂矿、仓库、机房等地起重货物使用，在没有电力的情况下更具独特优势。产品符合国家机械行业标准JB/T7332-2016。

GCT-A

GCT-B

GCT-A-2

GCT-B-2

GCL-A-0.5

GCL-A-5

GCL-B-0.5

GCL-B-20

GCT SERIES TROLLEY

GCT系列手推单轨小车

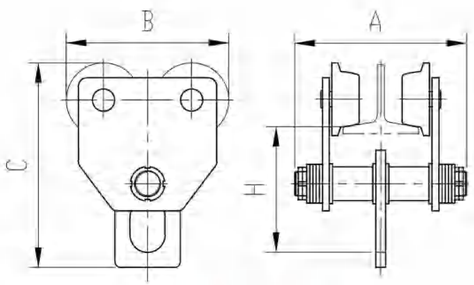

GCT-A

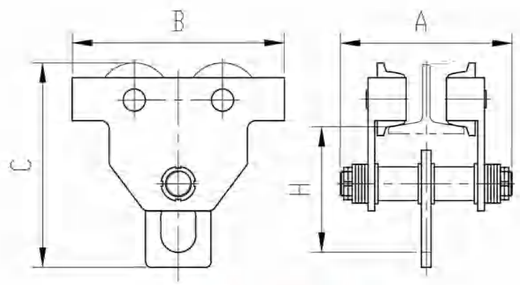

GCT-B

性能参数表 SPECIFICATION

型号规格 Model			GCT0.5	GCT1	GCT2	GCT3	GCT5	GCT10
额定起重量 Rated capacity		Ton	0.5	1	2	3.2	5	10
试验载荷 Test load		kN	6.3	12.5	25	40	63	125
最小转弯半径 Min.curve radius		m	1	1	1.3	1.5	1.6	2.2
推荐用工字钢宽度 I-beam flange width recommended		mm	68~130	68~130	88~146	110~154	116~170	130~180
推荐用工字钢型号 I-Beam model recommended		mm	(10~32a)	(10~32a)	(16~40c)	(22a~45c)	(25a~56c)	(32a~63c)
主要尺寸 Main dimensions (mm)	A		200	220	230	242	276	330
	B	GCL-A	163	186	218	248	286.6	
		GCL-B	200	223	258	296	344	400
	C		173.5	205.5	272	290	339	423.5
	H		100.5	117.5	159	162	186	239
净重 Net weight(kg)		GCL-A	5.7	6.5	12	20	30	
		GCL-B	6.3	8	13.4	22.1	32.6	67
毛重 Gross weight(kg)		GCL-A	6	7	12.5	21	31	
		GCL-B	6.6	8.5	13.9	23.1	33.6	77

GCL SERIES TROLLEY

GCL系列手链单轨小车

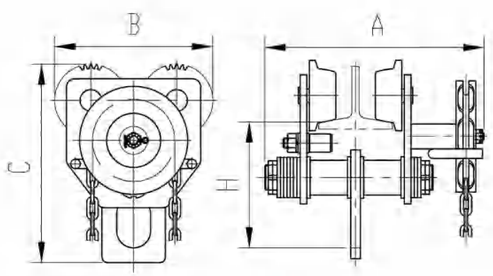

GCL-A

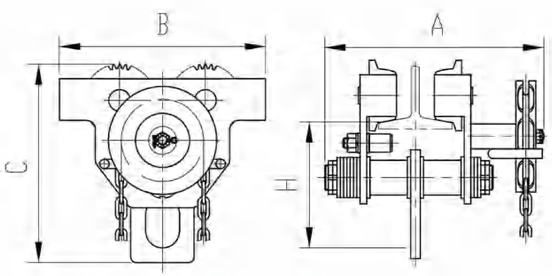

GCL-B

性能参数表 SPECIFICATION

型号规格 Model			GCL0.5	GCL1	GCL2	GCL3	GCL5	GCL10	GCL20	GCL20-D
额定起重量 Rated capacity		Ton	0.5	1	2	3.2	5	10	20	20
试验载荷 Test load		kN	6.3	12.5	25	40	63	125	250	250
标准运行高度 Standard running height		m		2.5				3		
最小转弯半径 Min.curve radius		m	1	1	1.3	1.5	1.6	2.2	5	4
推荐用工字钢宽度 I-beam flange width recommended		mm	68~130	68~130	86~146	110~154	116~170	130~180	136~180	136~180
推荐用工字钢型号 I-Beam model recommended		mm	(10~32a)	(10~32a)	(16~40c)	(22a~45c)	(25a~56c)	(32a~63c)	(36a~63c)	(36a~63c)
主要尺寸 Main dimensions (mm)	A		262	266	281	307	320	413	460	460
	B	GCL-A	163	186	218	248	286.6			434
		GCL-B	200	223	258	296	344	400	810	
	C		173.5	205.5	272	290	339	423.5	438	549
	H		100.5	117.5	159	162	186	239	242	325
净重 Net weight(kg)		GCL-A	9.8	11.5	17	24	35.5			147
		GCL-B	10.4	12.5	18.4	26.1	38.1	70	150	
毛重 Gross weight(kg)		GCL-A	10.6	12.5	18.5	25.5	39			160
		GCL-B	11.2	13.5	20	27.8	41.6	80	165	

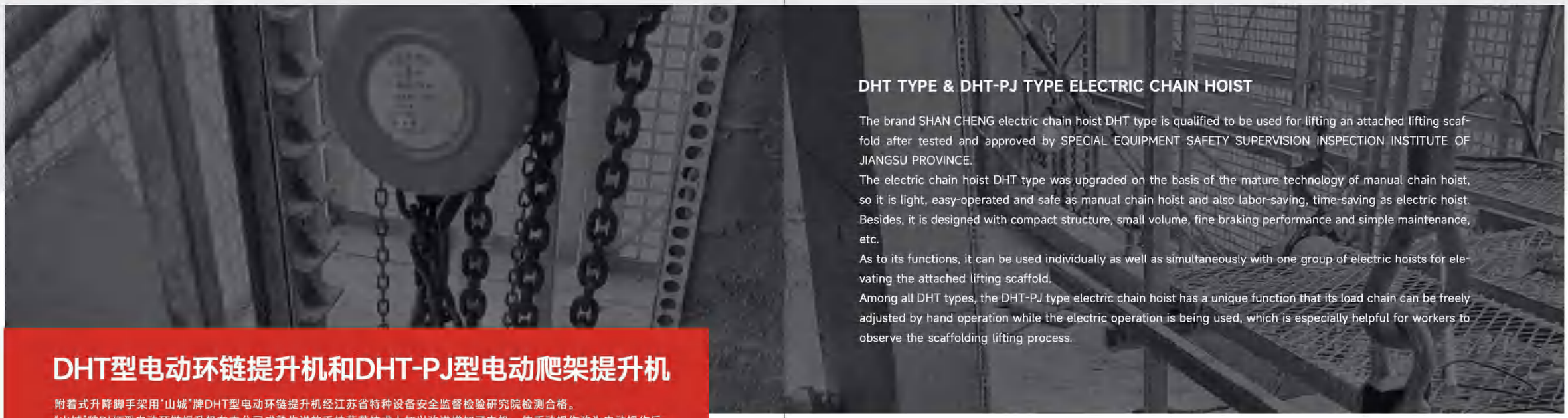

DHT型电动环链提升机和DHT-PJ型电动爬架提升机

附着式升降脚手架用"山城"牌DHT型电动环链提升机经江苏省特种设备安全监督检验研究院检测合格。
"山城"牌DHT型电动环链提升机在本公司成熟先进的手拉葫芦技术上加以改进增加了电机，使手动操作改为电动操作后，电动提升机既具有手拉葫芦轻巧、方便、安全等优点，又具有电动葫芦节省人力、安全等特点。可单台使用，也可多台同时用于"附着式升降脚手架"升降。其具有结构紧凑、体积小、制动可靠、维护简单等特点。
特别是DHT-PJ型电动爬架提升机，既可电动提升，又增加了手动自由调节起重链条的功能，有利于重物升降过程中的观察。其用于"附着式升降脚手架"升降，更具有其独特的优势。

DHT TYPE & DHT-PJ TYPE ELECTRIC CHAIN HOIST

The brand SHAN CHENG electric chain hoist DHT type is qualified to be used for lifting an attached lifting scaffold after tested and approved by SPECIAL EQUIPMENT SAFETY SUPERVISION INSPECTION INSTITUTE OF JIANGSU PROVINCE.
The electric chain hoist DHT type was upgraded on the basis of the mature technology of manual chain hoist, so it is light, easy-operated and safe as manual chain hoist and also labor-saving, time-saving as electric hoist. Besides, it is designed with compact structure, small volume, fine braking performance and simple maintenance, etc.
As to its functions, it can be used individually as well as simultaneously with one group of electric hoists for elevating the attached lifting scaffold.
Among all DHT types, the DHT-PJ type electric chain hoist has a unique function that its load chain can be freely adjusted by hand operation while the electric operation is being used, which is especially helpful for workers to observe the scaffolding lifting process.

性能参数表 SPECIFICATION

型号规格 Model		DHT1	DHT1.5	DHT2	DHT3	DHT5-1	DHT5-2	DHT7.5-1	DHT7.5-2	DHT10-1	DHT10-2	DHT20-1	DHT20-2
额定载荷 Rated Capacity	Ton	1	1.5	2	3	5	5	7.5	7.5	10	10	20	20
标准起升高度 Standard lift	m	2.5	2.5	2.5	3	3	3	3	3	3	3	3	3
试验载荷 Test load	Ton	1.25	2	2.5	4	6.3	6.3	10	10	12.5	12.5	25	25
两钩间最小距离 min. distance between two hooks	mm	300	360	380	470	600	600	650	650	730	730	1000	1000
起重链行数 No. of load chain falls		1	1	2	2	2	2	3	3	4	4	8	8
起重链圆钢直径 Load chain diameter	mm	6	8	6	8	10	10	10	10	10	10	10	10
电源 Voltage		380V 50HZ											
电动机功率 Power	kw	0.3	0.3	0.3	0.3	0.5	0.75	0.5	0.75	0.5	0.75	0.5	0.75
开关类型 Switch		防雨型直控开关 Rainproof Switch											
提升速度 Lifting speed	m/m	0.9	0.9	0.45	0.45	0.17	0.35	0.113	0.233	0.085	0.175	0.085	0.175
净重 Net weight	kg	26	32	30	37	54	54	71	71	88	88	195	195
装箱毛重 Gross Weight	kg	28	34	32	42	65	65	85	85	102	102	235	235
装箱尺寸 Packing Size	cm	34x34x34	34x34x34	34x34x34	34x34x34	43x36x43	43x36x43	62x50x43	62x50x43	62x50x43	62x50x43	72x72x85	72x72x85
起升高度每增加1米增加重量 Extra weight per meter of extra lift	kg	0.8	1.4	1.6	2.8	4.4	4.4	6.6	6.6	8.8	8.8	17.7	17.7

DHT1

DHT5-1

DHT7.5-1

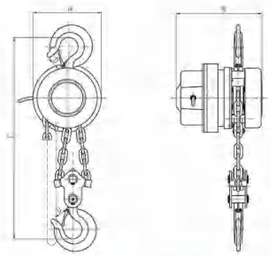

DHT5-1

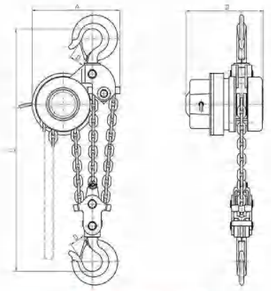

DHT7.5-1

DHT-PJ-5

DHT-PJ-7.5

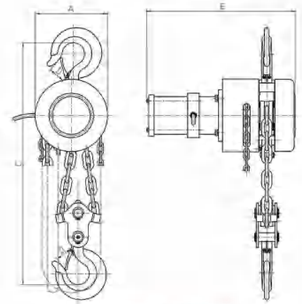

DHT-PJ-5

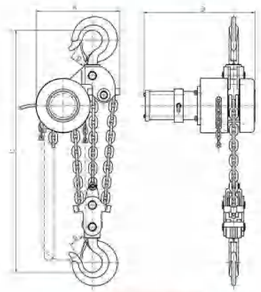

DHT-PJ-7.5

性能参数表 SPECIFICATION

型号 Model			DHT-PJ-5	DHT5-1	DHT-PJ-7.5	DHT7.5-1
起重量 Rated capacity		Ton	5	5	7.5	7.5
起重高度 Standard lift		m	6	6	6	6
试验载荷 Test load		kN	63	63	100	100
两钩间最小距离 min. distance between two hooks		mm	600	600	650	650
提升速度 Lifting speed		m/min	0.082	0.17	0.09	0.113
起重链行数 No. of load chain falls			2	2	3	3
起重链条圆钢直径 Load chain diameter		mm	10	10	10	10
电源 Voltage			380V 50HZ	380V 50HZ	380V 50HZ	380V 50HZ
电机功率 Power		kw	0.12	0.5	0.25	0.5
电机工作制式 Motor working types			S2	S2	S2	S2
主要尺寸 Main sizes(mm)	A	mm	211	239	327	341
	B	mm	433	300	433	300
	C	mm	44	44	57	57
	D	mm	65	65	76	76
	E	mm	351	217	351	217
净重 Net weight		kg	60.5	66	85	90
毛重 Gross weight		kg	70	88	100	105
装箱尺寸(长x宽x高) Packing sizes (LxWxH)		mm	430x330x510	430x360x430	530x480x530	530x480x430
起升高度每增加1米增加重量 Extra weight per meter of extra lift		kg	4.2	4.2	6.3	6.3

备注：除表列外，在12米以内各起升高度，均可订货。
Remark: The lifting height between 2.5m and 12m is available on request.

微型电动葫芦系列

- √ CE/GS认证
- √ 急停开关
- √ 可安装热保护装置
- √ 电压可做110V/220V/380V
- √ 防护等级IP54
- √ 上限位开关
- √ 下限位开关可选择
- √ 无线遥控可控型微电可提供

微电-单钩
Single-hook Mini Electric Hoist

微电-双钩
Double-hook Mini Electric Hoist

带跑车微电
Mini Electric Hoist with Electric Trolley

无线遥控型微电
Mini Electric Hoist with Wireless Remote Control

带下限位装置微电
Mini Electric Hoist with Lower Limit Device

性能参数表 SPECIFICATION

				微型电动葫芦（不带跑车型）Mini Electric Hoist						微型电动葫芦（带跑车型）Mini Electric Hoist with Electric Trolley			
产品型号 Model	使用方法 Usage Method	额定电压 Rated Voltage	输入功率 Input Power (W)	额定起重量 Rated lifting Weight (kg)	起升速度 Lifting Speed (m/min)	起重高度 Lifting Height (m)	钢丝绳直径 Wire Rope Diameter (mm)	毛重/净重 G.W./ N.W. (kg) 2pcs/CTN	包装尺寸 Packing Size (cm)	行车载荷 Load of electric trolley (t)	行车速度 Speed of trolley (m/min)	包装尺寸 Packing Size (cm) 1pc/ Wooden Box	毛重/净重 G.W./ N.W. (kg)
PA200	单钩 Single Hook	220230V 56/60HZ	550	100	10	12	3	24/22	37*30.5*25	0.5	13	49*41*47	31/29
	双钩 Double Hook			200	5	6							
PA250	单钩 Single Hook		600	125	10	12	3	24/22	37*30.5*25				
	双钩 Double Hook			250	5	6							
PA300	单钩 Single Hook		650	150	10	12	3	25/23	36*31*28				
	双钩 Double Hook			300	5	6							
PA400	单钩 Single Hook		950	200	10	12	4	35/32	44.5*33*27	1		58*48*48	35/33
	双钩 Double Hook			400	5	6							
PA500	单钩 Single Hook		1020	250	10	12	4	36/32.5	44.5*33*27				
	双钩 Double Hook			500	5	6							
PA600	单钩 Single Hook		1200	300	10	12	4	37/33	44.5*33*27				37/35
	双钩 Double Hook			600	5	6							
PA800	单钩 Single Hook		1300	400	8	12	5	39/37	44.5*33*27				39/37
	双钩 Double Hook			800	4	6							
PA1000	单钩 Single Hook		1700	500	8	12	6	34/31	54*24*31			62*51*53	56/54
	双钩 Double Hook			1000	4	6							
PA1200	单钩 Single Hook		1900	600	8	12	6	35/34	54*24*31			62*51*53	57/55
	双钩 Double Hook			1200	4	6							

扁平吊带
FLAT WEBBING SLING

载重范围：1吨-30吨
长度范围：1米-12米
标准：EN1492-1：2008
安全系数：5倍、6倍、7倍、8倍
材质：高强度涤纶丝

Load Scope: 1T to 300T
Length Available: 1m-12m
Standard: EN1492-1：2008
Safety factor available: 5:1, 6:1, 7:1, 8:1
Material: 100% high tenacity polyester
With reinforced lifting eyes

性能参数表 SPECIFICATION

色号标准 Colorcoded WLL based on EN1492- 1	带宽 Webbing width (mm)	一根吊带载重限度 Working Load Limit with 1 webbing sling										两根吊带载重限度 Working Load Limit with 2 webbing sling			
					Straight Lift	Choked Lift	0°- 7°	7°- 45°	45°- 60°	Up to 45°	45°- 60°	Straight up to 45°	Choked lift up to 45°	Straight lift 45°-60°	Choked lift 45°-60°
		6:1	7:1	8:1	1.0	0.8	2.0	1.4	1.0	0.7	0.5	1.4	1.12	1	0.8
1T	25	30	50	1.00	0.80	2.00	1.40	1.00	0.70	0.50	1.40	1.12	1.00	0.80
2T	50	60	60	2.00	1.60	4.00	2.80	2.00	1.40	1.00	2.80	2.24	2.00	1.60
3T	75	90	90	3.00	2.40	6.00	4.20	3.00	2.10	1.50	4.20	3.36	3.00	2.40
4T	100	120	120	4.00	3.20	8.00	5.60	4.00	2.80	2.00	5.60	4.48	4.00	3.20
5T	125	150	150	5.00	4.00	10.00	7.00	5.00	3.50	2.50	7.00	5.60	5.00	4.00
6T	150	180	180	6.00	4.80	12.00	8.40	6.00	4.20	3.00	8.40	6.72	6.00	4.80
8T	200	240	240	8.00	6.40	16.00	11.20	8.00	5.60	4.00	11.20	8.96	8.00	6.40
10T	250	300	300	10.00	8.00	20.00	14.00	10.00	7.00	5.00	14.00	11.20	10.00	8.00
12T	300	300	300	12.00	9.60	24.00	16.80	12.00	8.40	6.00	16.80	13.44	12.00	9.60

捆绑带
CARGO LASHING/RATCHET TIE DOWN/RATCHET STRAPS

捆绑器属于手动捆绑工具，用于汽车运输捆绑货物。它由各种不同规格的涤纶带及金属制品，如钩子，手拉器组成。具有操作灵活，省时省力，携带方便等特点。

Ratchet Tie Down is one kind of hand tools to bind and fix goods on vehicles. It is composed of different types and sizes of webbings, hooks and ratchet buckles, with features of easy operation and portability which is time-saving and labor-saving.

性能参数表 SPECIFICATION

型号 Ltem No.	破断强度 Breaking Strength	宽度 Width (mm)	厚度 Thickness (mm)	延伸率 Elongation (%)	钩型 Hook Types	颜色 Color	长度 Length
RTD2501	800	25±1.0	1.0±0.5	<7%	J hook Double J hook Flat hook Swan hook Steel S hook Rubber Coated S hook S hook with keeper	Purple Yellow Blue Red Orange Green Grey Brown Black	Any length is available
RTD2502	1000	25±1.0	1.0±0.5	<7%			
RTD2503	1200	25±1.0	1.0±0.5	<7%			
RTD2504	1500	24-25.5	1.5±0.5	<7%			
RTD2505	2200	24-25.5	2.2±0.5	<7%			
RTD3501	3500	35±1.4	2.2±0.7	<7%			
RTD3502	4000	35±1.4	3.0±0.7	<7%			
RTD3503	4500	35±1.4	3.0±0.7	<7%			
RTD5001	3000	49.5±1.5	1.5±0.5	<7%			
RTD5002	4500	50±2.0	2.0±0.6	<7%			
RTD5003	4800	50±2.0	2.0±0.6	<7%			
RTD5004	5000	50±2.0	2.5±1.0	<7%			
RTD5005	5500	50±2.0	2.5±1.0	<7%			
RTD5006	6000	50±1.0	3.0±1.0	<7%			
RTD5007	6200	50±1.0	3.0±1.0	<7%			
RTD5008	7500	50±2.0	3.0±1.0	<7%			
RTD5009	9500	49±1.0	3.0±1.0	<7%			
RTD7501	10000	75±3.0	3.0±0.7	<7%			
RTD7502	15000	74±2.0	4.0±1.0	<7%			
RTD10001	15000	100±2.0	4.0±1.0	<7%			

圆套
ROUND SLING

载重：1吨-100吨
长度：1米-12米
欧盟标准：EN1492-1：2008
安全系数：5倍、6倍、7倍、8倍
材质：高强度涤纶丝

Load Scope: 1T to 300T
Length: 1m-12m
Standard: EN1492-1：2008
Safety factor available: 5:1, 6:1, 7:1, 8:1
Material: 100% high tenacity polyester

Each stripe is equal to 1 ton capacity
Low elongation

性能参数表 SPECIFICATION

颜色 Color	色号标准 Color-coded WLL based on EN1492-1	一根吊带载重限度 Working Load Limit with 1 webbing sling							两根吊带载重限度 Working Load Limit with 2 webbing sling			
		Straight Lift	Choked Lift	0°- 7°	7°- 45°	45°- 60°	Up to 45°	45°- 60°	Straight up to 45°	Choked lift up to 45°	Straight lift 45°-60°	Choked lift 45°-60°
		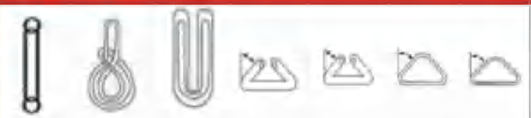										
		1.0	0.8	2.0	1.4	1.0	0.7	0.5	1.4	1.12	1	0.8
Purple	1T	1.00	0.80	2.00	1.40	1.00	0.70	0.50	1.40	1.12	1.00	0.80
Green	2T	2.00	1.60	4.00	2.80	2.00	1.40	1.00	2.80	2.24	2.00	1.60
Yellow	3T	3.00	2.40	6.00	4.20	3.00	2.10	1.50	4.20	3.36	3.00	2.40
Grey	4T	4.00	3.20	8.00	5.60	4.00	2.80	2.00	5.60	4.48	4.00	3.20
Red	5T	5.00	4.00	10.00	7.00	5.00	3.50	2.50	7.00	5.60	5.00	4.00
Brown	6T	6.00	4.80	12.00	8.40	6.00	4.20	3.00	8.40	6.72	6.00	4.80
Blue	8T	8.00	6.40	16.00	11.20	8.00	5.60	4.00	11.20	8.96	8.00	6.40
Orange	10T	10.00	8.00	20.00	14.00	10.00	7.00	5.00	14.00	11.20	10.00	8.00
Orange	12T	12.00	9.60	24.00	16.80	12.00	8.40	6.00	16.80	13.44	12.00	9.60

双眼柔性吊装带
ROUND SLINGS EYE & EYE

载重：1吨-300吨
长度：1米-80米
标准：EN1492-1：2008
安全系数：6倍、7倍、8倍
材质：高强度涤纶丝
高强度质量比，吊带表面光滑无损伤

Load Scope: 1T to 300T
Length: 1m-80m
Standard: EN1492-1：2008
Safety factor: 6:1, 7:1, 8:1
Material: High tenacity polyester
High Strength and weight ratio
Smooth webbing surface without damage

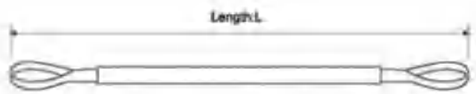

性能参数表 SPECIFICATION

色号标准 Colorcoded WLL based on EN1492-1	一根吊带载重限度 Working Load Limit with 1 webbing sling							两根吊带载重限度 Working Load Limit with 2 webbing sling			
	Straight Lift	Choked Lift	0°- 7°	7°- 45°	45°- 60°	Up to 45°	45°- 60°	Straight up to 45°	Choked lift up to 45°	Straight lift 45°-60°	Choked lift 45°-60°
	1.00	0.80	2.00	1.40	1.00	0.70	0.50	1.40	1.12	1.00	0.80
1T	1.00	0.80	2.00	1.40	1.00	0.70	0.50	1.40	1.12	1.00	0.80
2T	2.00	1.60	4.00	2.80	2.00	1.40	1.00	2.80	2.24	2.00	1.60
3T	3.00	2.40	6.00	4.20	3.00	2.10	1.50	4.20	3.36	3.00	2.40
4T	4.00	3.20	8.00	5.60	4.00	2.80	2.00	5.60	4.48	4.00	3.20
5T	5.00	4.00	10.00	7.00	5.00	3.50	2.50	7.00	5.60	5.00	4.00
6T	6.00	4.80	12.00	8.40	6.00	4.20	3.00	8.40	6.72	6.00	4.80
8T	8.00	6.40	16.00	11.20	8.00	5.60	4.00	11.20	8.96	8.00	6.40
10T	10.00	8.00	20.00	14.00	10.00	7.00	5.00	14.00	11.20	10.00	8.00
12T	12.00	9.60	24.00	16.80	12.00	8.40	6.00	16.80	13.44	12.00	9.60
15T	15.00	12.00	30.00	21.00	15.00	10.50	7.50	21.00	16.80	15.00	12.00
20T	20.00	16.00	40.00	28.00	20.00	14.00	10.00	28.00	22.40	20.00	16.00
25T	25.00	20.00	50.00	35.00	25.00	17.50	12.50	35.00	28.00	25.00	20.00
30T	30.00	24.00	60.00	42.00	30.00	21.00	15.00	42.00	33.60	30.00	24.00
50T	50.00	40.00	100.00	70.00	50.00	35.00	25.00	70.00	56.00	50.00	40.00
60T	60.00	48.00	120.00	84.00	60.00	42.00	30.00	84.00	67.20	60.00	48.00

CDH竖吊钢板起重钳 CDH VERTICAL LIFTNG CLAMPS

型号 Model	工作载荷 WLL (tonnes)	开口尺寸 Jaw Opening (mm)	重量 Weight (kg)
CDH0.8	0.8	0-16	2.8
CDH1	1.0	0-22	3.6
CDH2	2.0	0-30	5.5
CDH3.2	3.2	0-40	10
CDH5	5.0	0-50	17
CDH8	8.0	0-60	25
CDH10	10.0	0-80	32
CDH12	12.0	0-90	48
CDH16	16.0	60-125	80
CDH30	30.0	80-225	125

CD竖吊钢板起重钳 CD SERIES VERTICAL LIFTING CLAMPS

型号 Model	工作载荷 Working load	试验载荷 Test load (kgs)	开口尺寸 Jaw Opening (mm)	净重 Weight (kg)
CD-0.8	800	1600	0-15	2.0
CD-1.6	1600	3200	0-20	7.0
CD-2.0	2000	4000	0-25	8.0
CD-3.2	3200	6400	0-25	15
CD-5.0	5000	10000	0-30	21
CD-8.0	8000	16000	0-45	34
CD-12	12000	24000	50-90	52
CD-16	16000	32000	60-100	65
CD-20	20000	40000	80-150	145
CD-25	25000	50000	80-150	145
CD-30	30000	60000	80-150	148

L系列横吊钢板起重钳 L HORIZONTAL LIFTING CLAMP

型号 Model	工作载荷 Working load	试验载荷 Test load (kgs)	开口尺寸 Jaw Opening (mm)	净重 Weight (kg)
L-0.8	800	1600	0-15	2.0
L-1.0	1000	2000	0-20	4.0
L-1.6	1600	3200	0-25	6.5
L-2.5	2500	5000	0-30	11
L-2.5A	2500	5000	25-50	11
L-3.2	3200	6400	0-40	12.5
L-3.2A	3200	6400	30-60	12.5
L-5.0	5000	10000	0-50	20
L-5.0A	20000	10000	50-80	20
L-10	10000	20000	20-100	43

PDB系列横吊钢板起重钳 PDB HORIZONTAL LIFTING CLAMP

型号 Model	最大工作载荷 Maximum working load	开口尺寸 Opening size (MM)	净重 Weight(kg)
PDB0.8	0.8	0-25	2.5
PDB1	1	0-30	3.5
PDB1.6	1.6	0-30	4
PDB2	2	0-40	5
PDB3.2	3.2	0-45	6
PDB4	4	0-50	6.5
PDB5	5	0-55	7.5
PDB6	6	0-65	10.5
PDB6	6	0-130	22
PDB8	8	0-100	22
PDB10	10	0-125	23
PDB16	16	50-150	90
PDB30	30	100-270	108

DFQ系列翻转起重钳 DFQ TURN CLAMP

型号 Model	工作载荷 WLL (tonnes)	开口尺寸 Jaw Opening (mm)	重量 Weight (kg)
DFQ1.5	1.5	0-20	5
DFQ2.5	2.5	0-30	9
DFQ5	5.0	0-40	20
DFQ8	8.0	0-50	26
DFQ10	10.0	0-60	31
DFQ16	16.0	20-120	60
DFQ20	20.0	60-160	80

夹持器 BEAM CLAMP

型号 Model	工作载荷(Ton) WLL	开口尺寸(mm) Jaw Opening	自重(kg) Weight
YC1	1	75-220	4
YC2	2	75-220	5
YC3	3	80-320	9
YC5	5	80-320	11
YC10	10	90-320	16

牵引器/紧线器 HAND PULLER

规格型号 Item No.	工作载荷 W.L.L.(KG)	破断强度 B/S(KG)	钢丝绳直径与长度 Cable sizes (mm/m)	包装数量 QTY(pcs)	毛重/净重 GW/NW(kg)	特征 Features
KXJ1000	750	1000	Φ4.8x2.2	10	22/21	双齿、单线、双钩 Double Gear, Single Cables & Two Hooks
KXJ2000Q	1500	2000	Φ4.8x2.2	10	23/22	双齿、双线、双钩 Double Gear, Double Cables & Two Hooks
KXJ2000	1800	2500	Φ5.0x2.2	10	25/24	双齿、双线、双钩 Double Gear, Double Cables & Two Hooks
KXJ3000	2250	3000	Φ5.5X3.05	6	26/25	双齿、双线、双钩 Double Gear, Double Cables & Two Hooks
KXJ4000	3000	4000	Φ6.0x3.05	4	23/22	双齿、双线、三钩 Double Gear, Double Cables & Three Hooks

钢丝绳牵引机 WIRE ROPE PULLING HOIST

型号 Model / 项目 Item	KL-800	KL-1600	KL-3200	KL-5400
额定起重量 (kg) Rated capacity	800	1600	3200	5400
额定前进手板力(N) Rated forward handpower	341	400	438	850
额定前进行程(mm) Rated forward distance	≥52	≥55	≥28	≥25
钢丝绳直径(mm) Wire rope diameter	8.3	11	16	20
钢丝绳安全系数 Wire rope safety factor	5	5	5	5
整机静载安全系数 Safety factor & Static load capacity	5	5	5	5
最大动载荷(kg) Max.travelling load	1200	2400	4800	8100
机体重量(kg) Net weight (kg)	6.4	12	23	59

油桶吊夹 DRUM CLAMPS

额定负载(kg) Capacity	1000
净重(kg) Net weight	3.6
链条长度(mm) Chain length	500

手摇绞盘 HAND WINCH

型号 Model	额定载重量 Rated pull (LBS)	速比 Gear ratio	手柄长度 Handle length (mm)	轮毂直径 Drum-hub dia (mm)	钢丝绳尺寸 Cable size (mmxm)	件/箱 Pieces per ctn	毛重 G.W. per ctn	净重 N.W. per ctn	装箱尺寸 Size of package(cm)
HW600	600	3.1:1	165	16	4.2x8	6	17kg	15kg	59x26x16
HW800	800	3.1:1	175	16	4.2x8	6	19kg	17kg	59x26x16
HW1000	1000	4.1:1	200	18	4.5x10	6	21kg	19kg	66x27x18
HW1200	1200	4.1:1	225	18	4.5x10	6	23kg	21kg	66x27x18
HW1400	1400	4.1:1	225	18	4.8x10	6	25kg	23kg	66x27x18
HW1600	1600	5.1:1	225	20	4.8x10	4	19kg	17kg	45x31x20
HW1800	1800	4.1:1&9.8:1	250	20	4.8x10	4	21kg	19kg	54x33x21
HW2000	2000	4.1:1&9.8:1	250	20	5x10	4	23kg	21kg	54x33x21
HW2500	2500	5.1:1&12.1:1	275	42	5.5x10	4	25kg	23kg	54x33x21

单轮开口滑车 HOOK TYPE SINGLE SHEAVE PULLEY BLOCK

额定起重量 Rated capacity (t)	使用钢丝绳直径 Wire Rope Diameter(mm)	滑轮底径 Pulley Inner Dia(mm)	滑轮外径 Pulley Outer Dia(mm)	包装尺寸 Packing sizes (cm)	包装数量 QTY per CTN	包装重量 Gross Weight (kg)
0.5	6.2~7.7	71	88	54x27x11.5	12	22.2
1	7.7~11	85	106	44x33x13.5	8	27.2
2	11~14	112	142	41x32x16.5	5	33.2
3.2	12.5~15.5	132	166	48x17x19.5	2	22.2
5	15.5~18.5	160	202	58x22x11	1	18.5
8	20~23	210	264		1	34.5
10	23~24.5	240	300		1	50
16	28~31	315	390		1	113.5
20	31~35	355	436		1	162.5

双轮开口滑车 HOOK TYPE DOUBLE SHEAVE PULLEY BLOCK

额定起重量 Rated capacity (t)	使用钢丝绳直径 Wire Rope Diameter(mm)	滑轮底径 Pulley Inner Dia(mm)	滑轮外径 Pulley Outer Dia(mm)	包装尺寸 Packing sizes (cm)	包装数量 QTY per CTN	包装重量 Gross Weight (kg)
1	6.2~7.7	71	88	49x33x11.5	6	19.9
2	7.7~11	85	106	41x39x13.5	4	25
3.2	11~14	112	142	50x24x16.5	2	23.5
5	12.5~15.5	132	166	59x15x19.5	1	20
8	15.5~18.5	160	202		1	33
10	17~20	180	226		1	48
16	23~24.5	240	300		1	75.2
20	26~28	280	348		1	138.9
32	31~35	355	436		1	23

三轮开口滑车 HOOK TYPE THREE SHEAVE PULLEY BLOCK

额定起重量 Rated capacity (t)	使用钢丝绳直径 Wire Rope Diameter(mm)	滑轮底径 Pulley Inner Dia(mm)	滑轮外径 Pulley Outer Dia(mm)	包装尺寸 Packing sizes (cm)	包装数量 QTY per CTN	包装重量 Gross Weight (kg)
3.2	7.7~11	85	106	47x17x18	2	19.2
5	11~14	112	142	54x17x17.5	1	18.2
8	12.5~15.5	132	166		1	30
10	15.5~18.5	160	202		1	47
16	17~20	180	226		1	49.8
20	20~23	210	264		1	69.6
32	26~28	280	348		1	188
50	31~35	355	436		1	360

品质第一 服务至上

单轮闭口滑车 CLOSED TYPE PULLEY BLOCK WITH SINGLE SHEAVE

额定起重量 Rated capacity (t)	使用钢丝绳直径 Wire Rope Diameter(mm)	滑轮底径 Pulley Inner Dia(mm)	滑轮外径 Pulley Outer Dia(mm)	包装尺寸 Packing sizes (cm)	包装数量 QTY per CTN	包装重量 Gross Weight (kg)
0.5	6.2~7.7	71	88	54x27x11.5	12	22.2
1	7.7~11	85	106	44x33x13.5	8	27.2
2	11~14	112	142	41x32x16.5	5	33.2
3.2	12.5~15.5	132	166	48x17x19.5	2	22.2
5	15.5~18.5	160	202	58x22x11	1	18.5
8	20~23	210	264		1	34.5
10	23~24.5	240	300		1	50
16	28~31	315	390		1	113.5
20	31~35	355	436		1	162.5

双轮闭口滑车 CLOSED TYPE PULLEY BLOCK WITH TWO SHEAVE

额定起重量 Rated capacity (t)	使用钢丝绳直径 Wire Rope Diameter(mm)	滑轮底径 Pulley Inner Dia(mm)	滑轮外径 Pulley Outer Dia(mm)	包装尺寸 Packing sizes (cm)	包装数量 QTY per CTN	包装重量 Gross Weight (kg)
1	6.2~7.7	71	88	49x33x11.5	6	19.9
2	7.7~11	85	106	41x39x13.5	4	25
3.2	11~14	112	142	50x24x16.5	2	23.5
5	12.5~15.5	132	166	59x15x19.5	1	20
8	15.5~18.5	160	202		1	33
10	17~20	180	226		1	48
16	23~24.5	240	300		1	75.2
20	26~28	280	348		1	138.9
32	31~35	355	436		1	237

三轮闭口滑车 CLOSED TYPE PULLEY BLOCK WITH THREE SHEAVE

额定起重量 Rated capacity (t)	使用钢丝绳直径 Wire Rope Diameter(mm)	滑轮底径 Pulley Inner Dia(mm)	滑轮外径 Pulley Outer Dia(mm)	包装尺寸 Packing sizes (cm)	包装数量 QTY per CTN	包装重量 Gross Weight (kg)
3.2	7.7~11	85	106	47x17x18	2	19.2
5	11~14	112	142	54x17x17.5	1	18.2
8	12.5~15.5	132	166		1	30
10	15.5~18.5	160	202		1	47
16	17~20	180	226		1	49.8
20	20~23	210	264		1	69.6
32	26~28	280	348		1	188
50	31~35	355	436		1	360

高强度链条
HIGH STRENGTH CHAINS

我公司可按ISO, DIN或JIS标准提供各种高强度起重链，提升链，捆扎链及吊链。

材质：高质量合金钢
质量等级：G80, G100
工艺处理：热处理
表面处理：抛光，发黑，镀锌
安全系数：最小4倍
产品标记：G80或者根据客户要求打字

LIFTING CHAIN WITH HEAT TREATMENT
Quality Grade: G80, G100
Material: High quality alloy steel
Surface Treatment: Polishing, blackening, galvanization
Safety Factor: min. 4 times
Mark on Chain Link: G80 or customized

ISO 3077-2001标准80级校正链
ISO3077-2001 G80 CALIBRATED LIFTING CHAINS

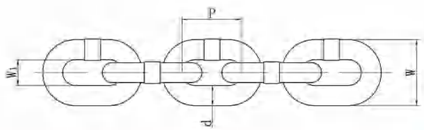

性能参数表 SPECIFICATION

链条规格 CHAIN SIZE (mm)	工作载荷 WLL(Tonnes)	名义直径d (mm)	节距P (mm)	外宽(w) mm(max)	内宽(w1) mm(max)	净重 WEIGH kG PER (100METERS)
6.0	1.1	6.0	18	20.4	7	81
6.3	1.2	6.3	19	20.4	7.2	90
7.1	1.60	7.1	21	23.8	8.4	116
8.0	2.00	8.0	24	27.2	9.6	142
9.0	2.50	9.0	27	30.6	10.8	182
9.5	2.80	9.5	29	32.3	11.9	198
10.0	3.20	10.0	30	34	12	221
11.2	4.00	11.2	34	37.4	13.2	260
13.0	5.3	13.0	39	44.2	15.6	400
16.0	8.00	16.0	48	54.4	19.2	564

ISO 3077-2001 80级非校正链
ISO3077- 2001 G80 UNCALIBRATED LIFTING CHAINS

性能参数表 SPECIFICATION

链条规格 CHAIN SIZE (mm)	工作载荷 WLL(Tonnes)	名义直径d (mm)	链条外长(最大值) mm(max)	链条外长(最小值) mm(min)	外宽(w) mm(max)	内宽(w1) mm(min)
6.0	1.1	6.0	30	28	21	7.5
6.3	1.20	6.3	32	30	22	7.9
7.1	1.60	7.1	36	34	25	8.9
8.0	2.00	8.0	40	38	28	10.0
9.0	2.50	9.0	45	43	32	11.3
10.0	3.20	10.0	50	47	35	12.5
11.2	4.00	11.2	56	53	39	14.0
13.0	5.30	13.0	65	62	46	16.3
16.0	8.00	16.0	80	76	56	20.0

起重链条三种表面处理方式
THREE KINDS OF SURFACE TREATMENTS OF LOAD CHAIN

抛光
Polishing

发黑
Blackening

镀锌
Galvanization

吊具
CHAIN SLING

捆扎吊链KZL-701-01

外观：金色镀锌，配曲吊钩
规格：7.1MM x 9FEET、7.1MM x 20FEET
载荷：可达70、80级要求

CHAIN SLING WITH HOOK
Model: KZL-701-01
Surface Treatment: Golden galvanized
Hook: Bent tie down hook (1pcs)
Size: 71MM x 9FEET, 71MM x 20FEET
Capacity: Grade70/80 optional

捆扎吊链KZL-10-01

外观：表面发蓝，两端配眼钩
规格：10MM x 20FEET
载荷：可达70、80级要求

CHAIN SLING WITH HOOK
Model: KZL-10-01
Surface Treatment: Blackening
Hook: Eye Grab hooks (2pcs)
Size: 10MM x 20FEET
Capacity: Grade70/80 optional

捆扎吊链KZL-10-02

外观：金色镀锌，两端配羊角钩
规格：10MM x 20FEET
载荷：可达70、80级要求

CHAIN SLING WITH HOOK
Model: KZL-10-02
Surface Treatment: Golden galvanized
Hook: Clevis Grab hooks (2pcs)
Size: 10MM x 20FEET
Capacity: Grade70/80 optional